Modern Applied Science; Vol. 17, No. 2; 2023
ISSN 1913-1844 E-ISSN 1913-1852
Published by Canadian Center of Science and Education

Develop and Design Small Scale UAV

Hairol Nizam Mohd Shah[1], Muhammad Aiman Mohamad Sebir[1], Mohd Fairus Abdollah[1],
Mohd Rizuan Baharon[2], Azhar Ahmad[3] & Mohd Ali Arshad[4]

[1] Center for Robotics and Industrial Automation, Faculty of Electrical Engineering, Universiti Teknikal Malaysia Melaka, Malaysia

[2] Department of Computer System and Communication, Faculty of Communication and Information Technology, Universiti Teknikal Malaysia Melaka, Malaysia

[3] Faculty of Electrical and Electronic Engineering Technology, Universiti Teknikal Malaysia Melaka, Malaysia

[4] Neuro Dynamics Enterprise, No.20-1, Jalan KNMP 3, Kompleks Niaga Melaka Perdana, Bukit Katil, 75450 Melaka, Malaysia

Correspondence: Hairol Nizam Mohd Shah, Center for Robotics and Industrial Automation, Faculty of Electrical Engineering, Universiti Teknikal Malaysia Melaka, Malaysia. E-mail: hnizam@utem.edu.my

Received: July 20, 2023 Accepted: September 11, 2023 Online Published: October 25, 2023

doi:10.5539/mas.v17n2p49 URL: https://doi.org/10.5539/mas.v17n2p49

Abstract

Nowadays, many people want to buy a small-scale unmanned aerial vehicle (UAV) either for recreational purposes, photography and video editing or for air surveillance. The main issue with conventional small-scale UAVs is that they require experience to operate them. Besides that, the control system also plays important role for its flight stability and endurance for small-scale UAV. The weight of the load and travelling speed also being issued for small-scale UAV. As a result, three objectives were formulated based on the problem statement which are to fabricate the appropriate size of a small-scale UAV in term of its mass and frame size; to design the control system and increase the stability of the small-scale UAV; and to test the flight endurance of the small-scale UAV. This research is conducted through the following methodology, which is designing the quadcopter body mainframe, constructing the circuit diagram, developing the RC transmitter and receiver for Arduino and testing the UAV functionality and flight test. Softwares that were involved in this project are Solidworks, Arduino compiler, Proteus, Processing and Matlab. The equipments that are used are Arduino UNO, MPU-6050 sensor, Li-Po 11.1V battery, Electronic Speed Controller (ESC), brushless DC motor, 2.4 GHZ RC transmitter and 6-channel receiver. The limitation also being found from those experiments. Finally, the results and discussion will show and explain about the early sketch for quadcopter body mainframe including dimension for each part and stress-strain diagram using Solidworks. It also includes the simulation and hardware connection for brushless DC motor and MPU-6050 sensor using Proteus, Arduino compiler, Processing and Matlab software.

Keywords: uav, arduino uno, mpu-6050, electronic speed controller (ESC) and li-po battery

1. Introduction

An unmanned aerial vehicle (UAV) is described as a spaced vehicle which flies on board without a human crew and can be controlled remotely or can fly independently. Due to attractive features such as low cost, high maneuverability and easy maintenance, small-scale UAVs are a powerful tool for scientific research. Small-scale UAVs can be used in many areas, including emergency response, victim search and rescue, aerial photography, geological survey, weather forecasting, pollution assessment, fire detection, and radiation control (Cai et al., 2014).

There are three types of small-scale UAV platform which are small tactical, miniature and micro UAVs. Small tactical UAVs have top performance among the three UAV types in term of tactical and high altitude long endurance. Small tactical UAVs are primarily used in mobile military battle groups for military operations such as identification, targeting, surveillance and airfield protection. These can also be used in various civil missions such as ship-to-shore surveillance, power line inspection and traffic surveillance.

Next, miniature UAVs, compared with the former type, possess reduced travelling speed and payload, and thus operate in a more confined space with decreased flight endurance. Miniature UAVs can be easily incorporated

into various civil applications for aerial photography and sensing, contact relays and newly emerging products and after delivery. Lastly, micro UAVs can be describe as drone that has wing or rotor-span no greater than 15cm (Cai et al., 2014).

The main obstacle in the development and design of small-scale UAV is how to design the appropriate size of small drone in term of its mass and frame size. The conventional small-scale UAV have small body center but large rotor sizes make it imbalance and difficult to control. The mass of its frame and its inside components also play an important role so that this structure is concrete (Hassanalian.et al., 2017)

Next, the small-scale UAV requires a specific control system with the aid of appropriate sensor. The conventional small-scale UAV such as the recreational drone may not have good control system and no guide from appropriate sensor. With gyroscope sensor equipped to the control system, the UAV can easily balance and able to flight longer time (Rajpoot et al., 2016). Quadcopter requires a flight stability sensor that during its flight mode stabilizes quadcopter (Kishor and Singh, 2017).

Lastly, flight endurance is very important for UAV especially when it comes to military operations. For conventional small-scale UAV, it flights endurance may take less than 20 minutes (Shenoy et al., 2018). But, if the small-scale UAV is attached only with the necessary equipments such as microcontroller and rotor, it may increase the flight endurance due to less resistance of its mass.

The three objectives from the main problem are to fabricate the appropriate size of a small-scale UAV in term of its mass and frame size; to design the control system and increase the stability of the small-scale UAV; and to test the flight endurance of the small-scale UAV.

For this small-scale UAV, quadcopter type will be chosen as the mainframe body design. The microcontroller that will be used for the UAV is the Arduino UNO microcontroller. Next, it will have four mini-DC motors act as the rotors. To help increase its flight stability, gyroscope sensor is used. Lastly, this small-scale UAV will navigate between 0 to 1m height for flight endurance test.

2. Literature Review

2.1 Type of UAV

Today, various types of drones have evolved from the advancement of electronic component miniaturization, such as sensors, microprocessors, batteries, and navigation systems. For military and civilian purposes, a wide variety of drones were used. Drones range in size from large unmanned fixed-wing air vehicle (UAV) to smart dust (SD) consisting of many small micro-electro-mechanical systems including sensors or robots.

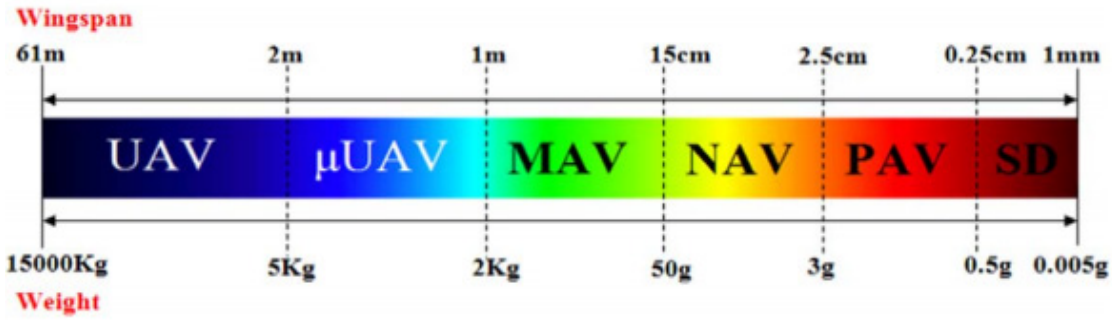

Figure 1. Spectrum of drones from UAV to SD (Hassanalian.et al., 2017)

The key factors that differentiate UAVs from other small drone types (such as MAVs and NAVs) include the vehicle's functional function, the materials used in its production, and the control system's complexity and cost. Different mission requirements leads to the creation of various types of UAVs. For this reason, it is useful to categorize UAVs in terms of their mission capabilities. UAVs can be considered as HTOL (horizontal take off landing), VTOL (vertical take-off landing), hybrid model (tilt-wing, tilt-rotor, tilt-body, and ducted fan), helicopter, heliwing, and unconventional types (Hassanalian.et al., 2017).

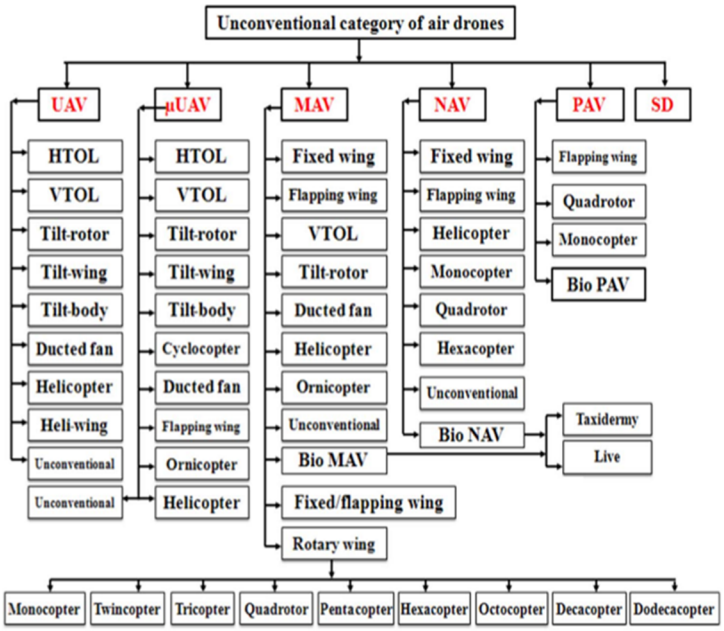

Figure 2. Different type of Air Drones (Hassanalian.et al., 2017)

2.1.1 Single Rotor Drone

The key practical feature of a single rotor UAV (SR-UAV) from a design point of view is the use of four rectangular airfoils, usually called control fins, which are mounted symmetrically at the base of the aircraft and immediately below the propeller. The fins are mounted to servo actuators for modifying the angle of attack and creating torque around all the main axes, allowing for a controllable attitude. The conceptual model is presented with a three-dimensional simulation.

The airframe consists of an inner core that carries the struts for avionics and carbon fiber reinforcement, which in turn links the core to a fan duct and the four control fins. A structural support for the suspension rod is designed to act as landing struts, on which the control fins were rigidly mounted. The design properties of SR-UAV can be divided into three sub-systems which is the avionics, the propulsion, and the flight control (Carholt, et al., 2016). The main components of the SR-UAV is shown in Figure 3.

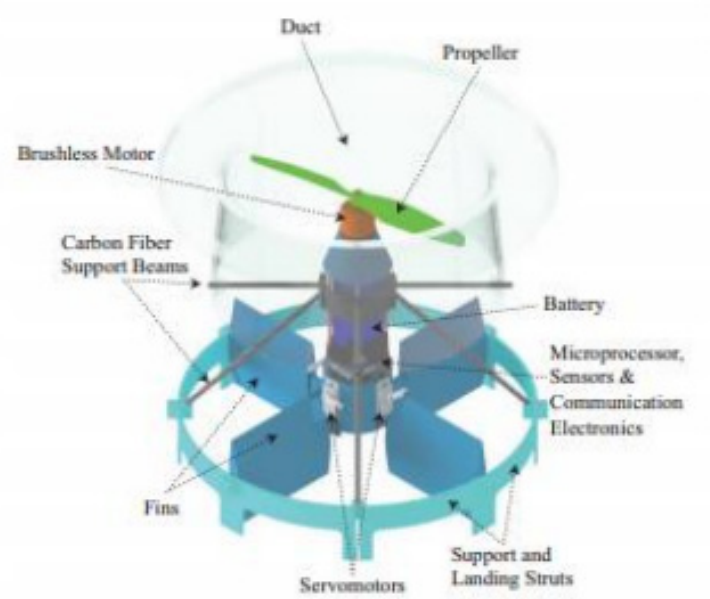

Figure 3. Main components of the SR-UAV (Carholt, et al., 2016)

2.1.2 Multi Rotor Drone

A rotorcraft with more than two rotors is a multirotor or multicopter. Multirotor often used fixed pitch blades whose rotor pitch does not differ as the blades rotate; vehicle motion control is accomplished by changing the relative velocity of each rotor to adjust the thrust and torque it generates (Mahen, et al., 2014). They are available in various types such as bi-copters, tricopters, quad-copters, penta-copters, hexa-copters and octacopters. Among these copters, the hexa- and octa-copters are considered to be the most stable drones (Agrawal and Shrivastav, 2015).

Figure 4. Bi-Copter (Agrawal and Shrivastav, 2015)

The BiCopter has two motors that servos can move. It is enriched with two servo motors and is therefore considered to be the cheapest multicopter, but it is the least stable and hard to adjust. It is also the least robust and has less power to lift because it only has two rotors. If one of the rotors doesn't spin, copter won't be able to travel forward, which was its greatest disadvantage.

Figure 5. Tri-Copter (Agrawal and Shrivastav, 2015)

Tricopters are considered the least expensive multirotor type because they have the fewest engines which use three engines. The advantage of the tricopter is that it has the widest angle (120 degrees) between the two front engines, making videography in the air quick while the propellers are out of firing. The Tricopter has three motors that are normally 120 degrees apart in a "Y" shape, or they are also sometimes in "T" shape. Two propellers pointing to the sides and slightly forward on the front arms and one leg at the back.

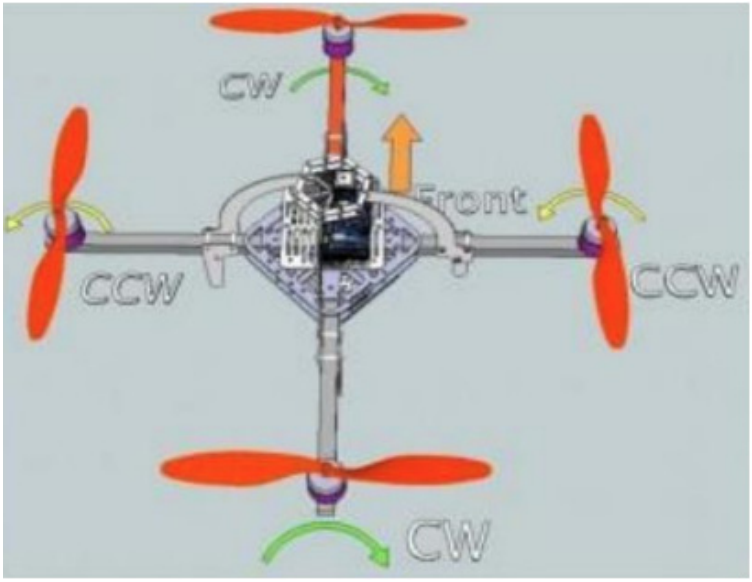

Figure 6. Rotation for Quadcopter in + Configuration

A quadcopter, also known as a quadrotor helicopter, is a multirotor helicopter that is equipped with four rotors and propellers. A quadcopter consists of four motors mounted on four symmetrical frames, with each arm being separated by 90 degrees (for X4 configuration). There are two sets of propellers Clockwise (CW) and Counter-Clockwise (CCW) mounted on the engines to generate opposite pressure to balance it (Ostojić, et al., 2015).

The operation of the quadcopter depends on the speed of its engine. It is essential that all four motors must turn at the same speed to create the same balance lifting power hover. The distribution of mass in quadcopter should also be prevalent and its mass point should be in the middle.

There are five engines for pentacopters. Pentacopter data is not available because it is not as common as other forms of copters due to possible underlying problems. However, pentacopters are very rare, and are regarded as the worst multirotor design. One of the pentacopter's main advantages is the wide angle of the two front arm allowing the propellers to remain as far as possible out of the picture which makes it easy to take aerial photos and videos without the props that bring it into a frame.

2.1.3 Fixed Wing Drone

Fixed-wing UAVs have very good flight endurance in which it able to cover a large area in a single flight. Nonetheless, they need a suitable landing area including some pilot ability to safely land them to avoid damage to the craft and sensors. The ability of UAVs to fly low with suitable sensors provides the opportunity to complete scale-appropriate measurements in fine spatial resolution, making them ideal tools for mapping the environment (Boon, et al., 2017).

A straight beam wing consists mainly of skin, rib wing and beam wing. Skin forms a streamlined wing outer surface that is involved in the force of the airframe. The skin should have enough lateral bending stiffness to ensure the surface's smoothness. To shape an integral board to withstand ordinary tension, the skin can be coupled with the stringer. The wing rib purpose is to form the wing profile shape. It is connected to the truss and skin and in the rigidity of its own plane, it provides vertical support to the truss and skin. Wing beam is a simple structure of load bearing capable of supporting shear force Q and bending moment M (Yu, 2018).

Figure 7. The Skywalker fixed-wing UAV (Boon, et al., 2017)

2.2 Type of Control System

Control system is a very important to UAV as it control the feedback signal from sensor to microcontroller. We can use Arduino UNO as the microcontroller and can choose either PID or Fuzzy control system to implement in the small-scale UAV.

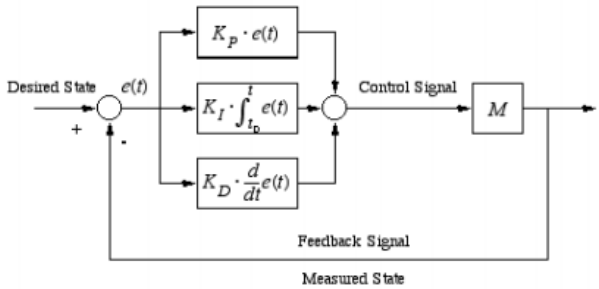

Figure 8. General PID Block Diagram (Abd Rahman et al., 2018)

One of the most attractive techniques used to stabilize and optimize UAV control is Proportional, Integral and Derivative (PID) control. During the flight, a balanced flight is favored where the aircraft retained its desired altitude seamlessly without the user external inputs. In cases where wind or other external disturbance has been detected, the FCU will calculate the errors between current and desired altitude as a processing unit and perform necessary corrections. By giving out more motor and/or servo outputs accordingly, PID controller tries to eliminate this disturbance (Abd Rahman et al., 2018).

In addition to the desired altitude, commands from the ground station or remote pilot include the desired angles of pitch, roll, and yaw. Every PID controller calculates the difference between feedback and reference and attempts to eliminate error. The output of each controller is combined to produce the desired pulse width modulation (PWM) signals and sent to the motor controllers to achieve the desired motor speed for each motor (Sababha et al., 2015).

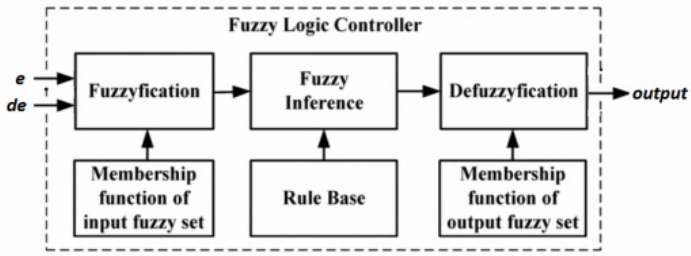

Figure 9. FLC Block Diagram (Rabah et al., 2018)

Fuzzy Logic Controller (FLC) is a logic operation based on many-valued logic rather than Boolean logic which is “true or false” (1 or 0). FLC has two inputs which is error (e) and its derivative (δe). The FLC have three main stages which are fuzzification, rule base and defuzzification. Fuzzification defines the FLC's input and output to define rules for regulating our process. Next, the rule base is defining as the collection of rules. “If Then” format

is used in this rule where If side called the conditions and Then side called conclusion.

Based on the calculated input error (e) and its derivative (δe), the machine will execute the rules and calculate a control signal. Defuzzification is when all triggered activities are combined and transformed into a single non-fuzzy output signal which is the system's control signal (Rabah et al., 2018). The advantage of using this control system is simplified control, low cost and the ability to design it without knowing the exact mathematical model of the process. Fuzzy logic is an alternative way of thinking that allows complex systems to be modeled using higher levels of abstraction from knowledge and experience. It also can be represented simply as terms of computation instead of the numbers or control with sentence rather than equation (Sharma and Barve, 2012).

3. Method

For the design of small-scale UAV, there will be four experiments that will be conducted including design the quadcopter body mainframe, design and fabricate the circuit diagram, develop the radio control (RC) transmitter and receiver of Arduino and test the UAV functionality and flight endurance. Figure 10 shows the flowchart to design and develop the small-scale UAV.

For this research, there will be a lot using hardware rather than software because it is for design and development. Table 1 shows hardware equipment list that will be using for this experiments.

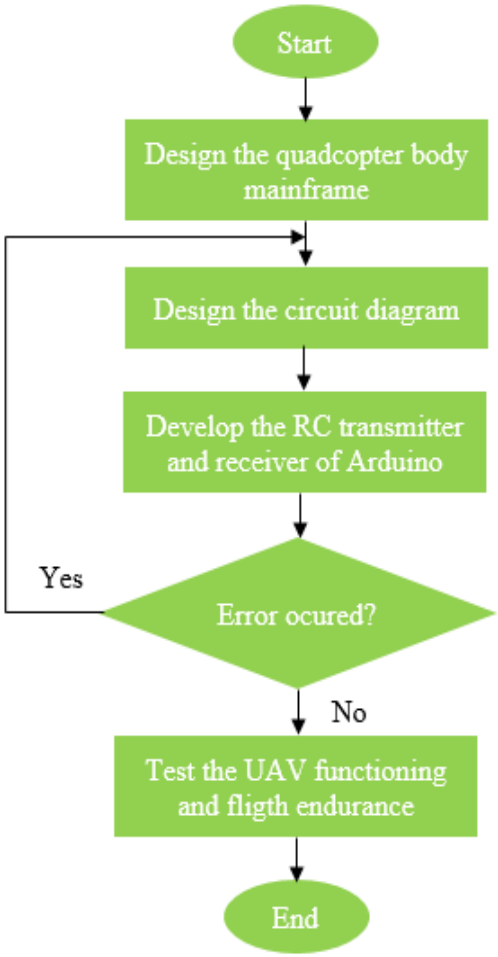

Figure 10. Flowchart of design and develop small scale UAV

Table 1. The List Equipment Of Hardware

Equipment	Unit
Arduino UNO	1
MPU-6050 sensor	1
LI-Po 11.1V battery	1
Electronic Speed Controller (ESC)	4
Brushless DC Motor	4
6 Channel receiver	1
2.4 GHz Flight Radio Control (RC)	1
ESC Power Distributor Board	1

Then, the software that are used in this research are Solidworks, Arduino compiler, Proteus, Processing and Matlab program. Arduino compiler is used to write program for ECS, 6-channel receiver and MPU-6050 as the gyroscope plus accelerometer sensor. Next, Proteus software is used to run the simulator for the circuit diagram meanwhile Processing and Matlab will run the 3D simulation and generate the output graph of MPU-6050 module for analysis. Lastly, digital oscilloscope is used to generate the output graph of clockwise and anticlockwise for the running motor with different speed.

3.1 Design the Quadcopter Body Mainframe

For quadcopter body mainframe, X-configuration was chosen comparee to + configuration. X-configuration can be considered more stable while + configuration will be more acrobatically or free style mode (Thu and Gavrilov, 2017). For this case, X-configuration is more suitable to improve the stability of quadcopter by circle designing for body centre and four curvatures for the propeller stand. The propeller 1 and 3 will be rotating clockwise (CW) while the propeller 2 and 4 will be rotating anticlockwise (CCW).

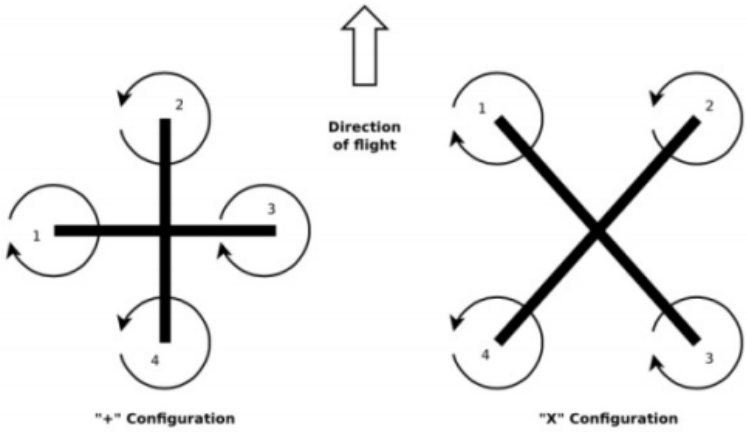

Figure 11. X-Configution and + Configuration of Quadcopter (Thu and Gavrilov, 2017)

Next, the type of material also needs to be considered. For this design, PLA material will be usee. PLA material is conveniently used in material strength compared to ABS due to its feature. For example, PLA tensile strength is higher compared to ABS which is 37MPA and 27 MPa respectively. Finally, the software that will be implemented in this design is Solidworks. Solidworks is a software that is conveniently used for designing 3D model because it is easier to sketch and extrude 3D objects compare to AutoCAD software.

3.2 Component Selection

For this experiment, there will be a lot of electronic parts will be using. For the rotor, it will be using DC brushless motor. DC brushless motor is more powerful comparee to DC brushed motor. Motor that has higher kV value will rotate propellers faster (Šustek & Úředníček, 2018). KV rating means the ratio unloaded motor RPM to peak voltage of wires in coil. The value of kV in DC brushless motor is higher compared to DC brushed motor due to its higher RPM of rotating coil. Then, this brushless motor will be control by ESC that control and regulates motor speed conventionally used in powered radio control models.

Next, the microcontroller that will be using is Arduino UNO. Then, the battery that will be using is Li-Po rechargeable battery. Range for Li-Po battery voltage is from 3.4V to 44.4V battery. The higher the voltage value of battery, the higher the weight load. For this experiment, it is just enough using 11.1V Li-Po battery to power up the circuit plus its weight and size can considered as light and small.

Finally, the electronic equipment that will be used for stabilizing the quadcopter is MPU-6050 module sensor. This sensor is the combination of gyroscope and accelerometer that can detect the angular rotation and dynamic force of three-axis simultaneously. So, it is easier to use rather than implement both gyroscope and accelerometer in Arduino port (Johansson and Wallén, 2017).

(a)→DC Brushless Motor (b)→Li-Po 11.1V Battery

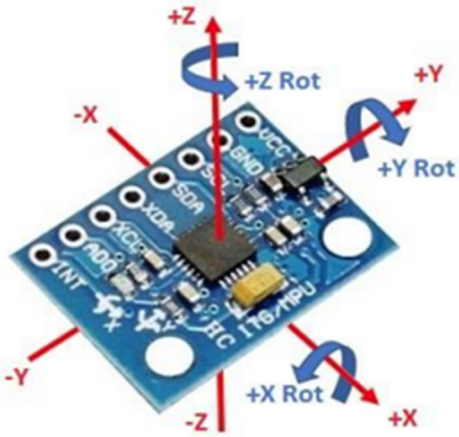

(c)→ MPU-6050 Sensor

Figure 12. Component selection

3.3 Develop the RC Transmitter and Receiver of Arduino

For this experiment, we will use 2.4 GHz Radio Control (RC) as the transmitter and 6-Channel Receiver for the receiver. The function of the transmitter and receiver is to control the drones by sending signal (Srivastava et al., 2017). The receiver will attach to quadcopter body while the transmitter will transmit the signal in 2.4 GHz. 6-channel receiver was using because it can be the proper channel to connect roll, pitch, yaw, throttle, Aux 1 and 2 from Arduino port.

Figure 13. A 2.4 GHz 6-Channel RC (Srivastava et al., 2017)

3.4 Test the UAV Functioning and Flight Test

For this experiment, it will be conducting after all hardware components assemble was finished and functioned. Firstly, the PWM towards clockwise (CW) and counterclockwise (CCW) brushless motor was conducted using digital oscilloscope. Next, the altitude of quadcopter towards range in distance and time parameter will be investigate (Huwang et al., 2018). Finally, the graph from altitude versus time graph will be sketched.

4. Results

4.1 Final Sketch of Quadcopter Body Mainframe

Figure 14 shows the 3D sketch of top quadcopter body. The material that been set for this sketch is PLA. As using the X-configuration for the quadcopter, the 4 DC motor holder is needed. The diameter hole for the four rotors is 2.8cm. Meanwhile, the length for each holder is 10.56 cm. The length between the holder is 27.38 cm. Figure 14 shows the full dimension for top quadcopter body.

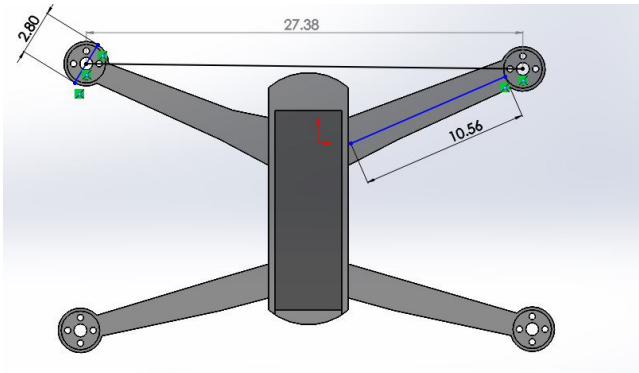

Figure 14. Full Dimension for Top Quadcopter Body

Hence, it is suitable to attach the propeller to the DC Motor because the total and half-length of propeller is 15.5 cm and 7.1 cm. The length of the holder needs to be considered half of propeller only because propeller will attach to rotor at center of DC motor while its spinning. Figure 15 shows the propeller for the quadcopter.

Figure 15. The Propeller for Quadcopter

Figure 16 shows the stress-strain diagram of top quadcopter body. The force that exerts to the body centre is 10 N for this simulation. The Von Misses colour chart indicates from low to high stress-strain. The center of bottom quadcopter body is in green colour indicate that it stress-strain little high. For the four motor holders, it shows dark blue colour indicate that stress-strain is low. The result of this simulation shows that the back motor holders bend a lot after center body exerted 10 N force.

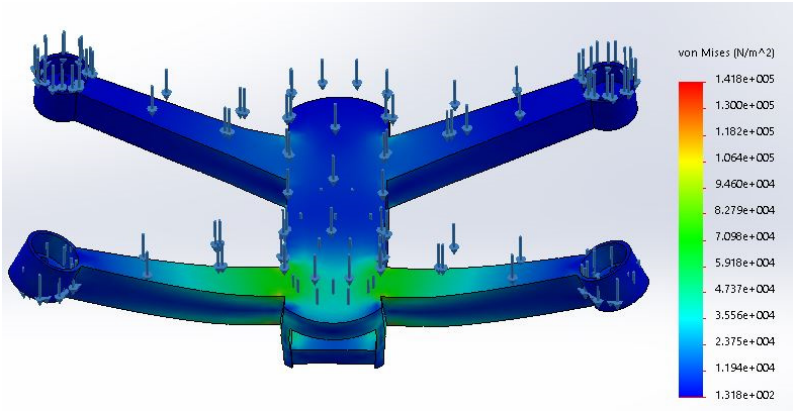

Figure 16. Stress-Strain diagram of Top Quadcopter body

4.2 Circuit Diagram of Quadcopter

For this circuit diagram of quadcopter, there will be two result consists of the Proteus simulation and real part configuration. For the Proteus simulation part, four DC motors and a motor controller will be used. The motor controller that was chosen is L293D since ESC part is not exist in Proteus library file. Then, the microcontroller that been used is Arduino UNO as it is the conventional controller that always been used to run electronic circuit simulation. The Arduino compiler also been used in this simulation to control the direction of DC motor rotation either in clockwise or counterclockwise. Figure 17 shows the initial circuit for the quadcopter DC motor simulation.

From Figure 17, the equipments that were used are four unit of DC motors and a L293D motor controller, Arduino UNO, variable resistor and push start button. From this diagram, the DC motor did not start rotating because the push start button did not activate at that time. This configuration is needed to build X-configuration for quadcopter flying system.

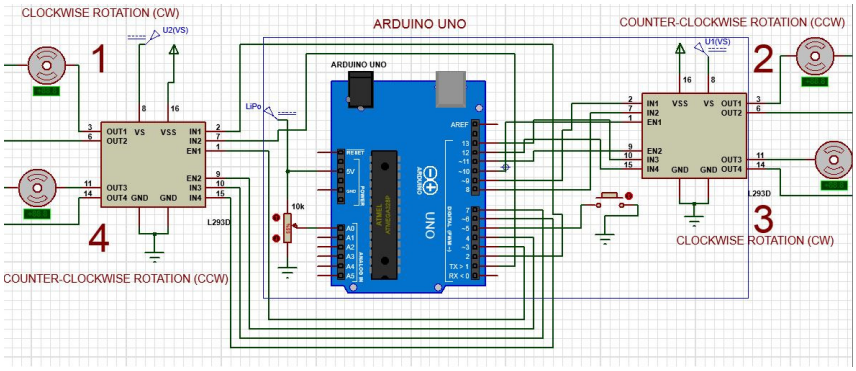

Figure 17. Initial Circuit for the Simulation

From the Figure 18, it shows the circuit is running after the push start button is activated. After the push start button is activated, the DC motor slowly rotate and then keep increasing rotating until the value of RPM is 400 above. The variable resistor can act as the analogue controller for the rotational of the DC motor. The RPM value for the clockwise rotation will be in positive value meanwhile counterclockwise rotation will be in negative value. The RPM for DC motor will be simultaneously same after the circuit running but the different direction of rotational will result positive and negative value of RPM.

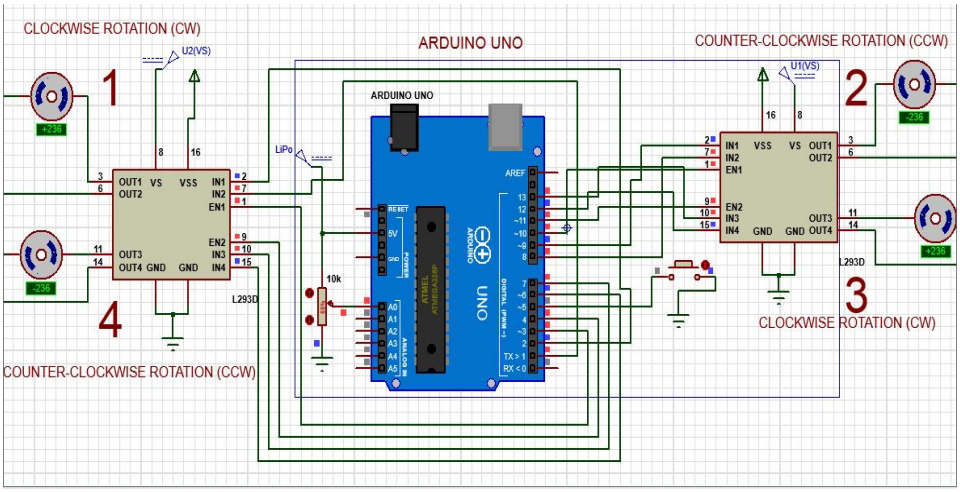

Figure 18. Running Circuit for the Simulation

Figure 19 shows the schematic diagram that is implemented for this quadcopter. From this schematic, two power source will be used for this whole circuit diagram. DC battery 9V will power up for controller which is Arduino UNO meanwhile Li-Po battery 11.1V will power four motors connected with ESC. MPU-6050 module and 6 channel receiver connected to Arduino port which is 5V and GND to power up through the 9V battery. Port 4 to 7 of Arduino connected with ESC 1 to 4 implemented that those port will instruct the motor to turn on and control it by the transmitter. Lastly, port 8 to 11 of Arduino connected to Channel 1 to 4 of the receiver ensure that those port will channel the signal from transmitter correctly by its channel which is roll, pitch, yaw and throttle following the channel sequence.

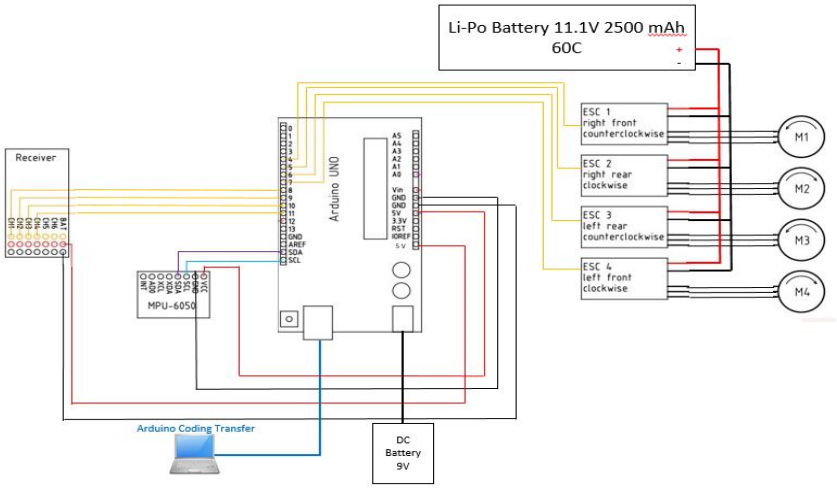

Figure 19. Schematic Diagram of Quadcopter

4.3 Calibration of MPU-6050 Sensor

Figure 20 shows the 3D simulation of MPU-6050. For this simulation, the software that were used is Arduino compiler and Processing while hardware that were used is Arduino UNO and MPU-6050 module. For Arduino compiler, I2CDEV library is needed to send to Arduino UNO to give constant value for gyroscope value, which is roll, pitch and yaw. After the calibration for Arduino UNO, Processing software will use MPUTeapot library to simulate the 3D diagram for the MPU-6050. The calculation that were performed by this software in this simulation are gravity vector, Euler angles and roll, pitch and yaw angles.

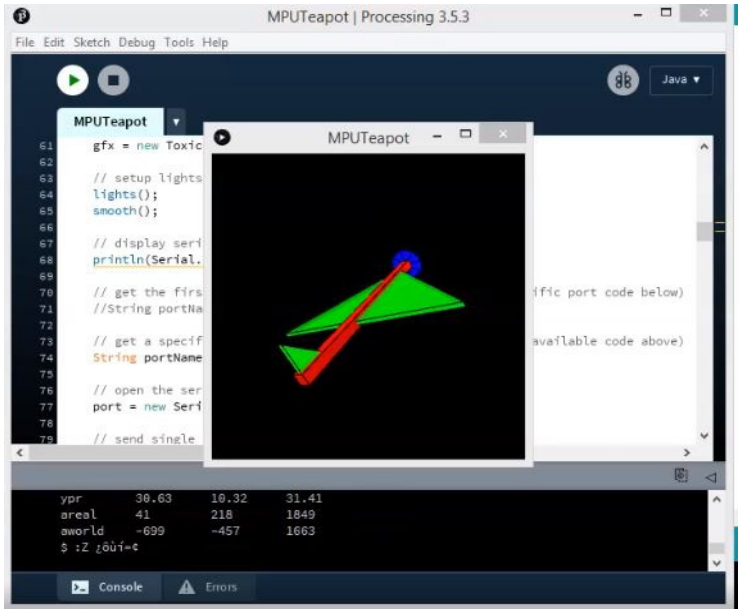

Figure 20. The 3D Simulation of MPU-6050

Figure 21 shows the connection between MPU-6050 with Arduino UNO. For the power port at Arduino UNO, +5V and GND will be connected to VCC and GND from MPU-6050. For the Analog Input at Arduino UNO, A4 will be connected to SDA while A5 will be connected to SCL from MPU-6050. SCL and SDA be referred as serial clock and serial data that connected to analogue port due to its signal in terms of analogue. Lastly, the INT which is interrupt port at MPU-6050 is connected to digital port 2 at Arduino UNO to change the value of the roll, pitch, yaw and gravity when the module rotates freely in hardware form to 3D simulation.

Figure 22 shows the output waveform from the accelerometer of MPU-6050 module generated from Matlab program. From this graph, its initial remain constant as the module in stationary generated the constant velocity output waveform. The module rotates freely upward, backward and side to side so that interrupt can happen. When the waveform rising upward, it shows that the module is accelerating while the downward waveform shows it is decelerating. This sensor module will be implemented for the quadcopter as it can send the signal to controller either want to accelerate, decelerate or remain constant according to the sensitivity of MPU-6050 module.

Figure 23 shows the output waveform of gyroscope. The sensitivity of gyroscope is higher compared to accelerometer make the output waveform graph running faster. This output waveform shows that the module has a lot of tendency to fall to y-axis compared to x-axis. The z-axis is range below than zero because the module did not move upward and downward yet. The interrupt of gyro x-axis indicates that the module is rotating to the right and left. Next, the interrupt of gyro y-axis indicates the module is moving forward and backward. Then, the interrupt of gyro z-axis indicates the module is moving upward and downward. This gyroscope will be implemented to the quadcopter as it can give the feedback to controller the suitable position so that it can maintain its stability and guide the user who controlled it from transmitter.

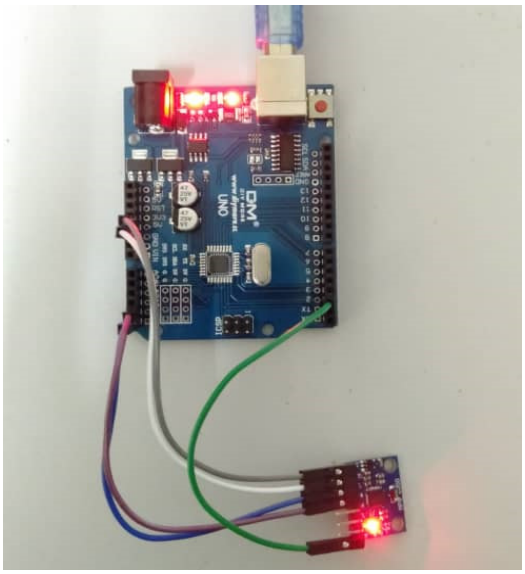

Figure 21. The Connection between MPU-6050 with Arduino UNO

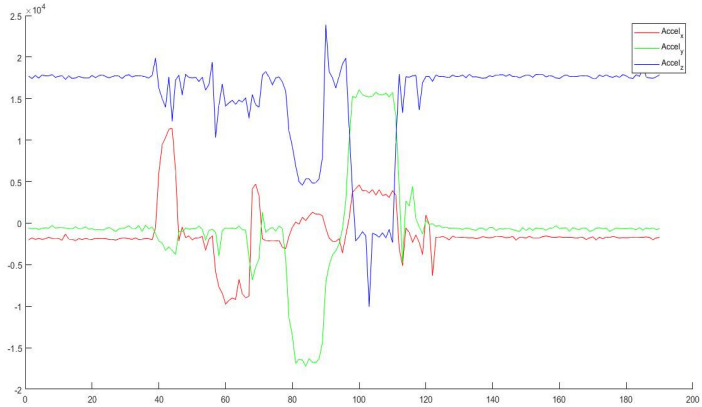

Figure 22. The Interrupt of Accelerometer Output Waveform

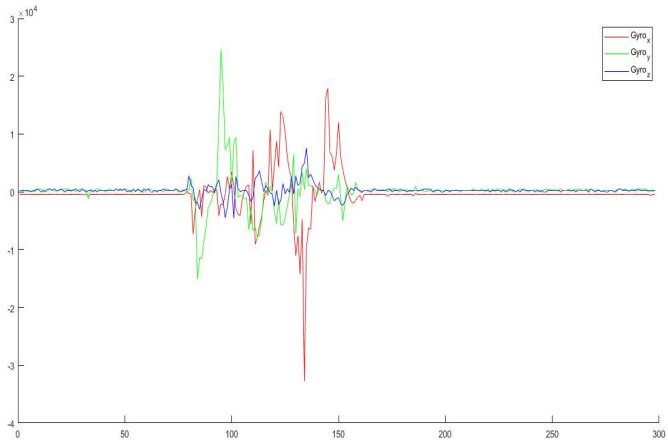

Figure 23. The Interrupt of Gyroscope Output Waveform

4.4 Motor Signal Test on Digital Oscilloscope

The problem statement for this experiment is to determine the output signal for brushless DC motor in low, medium and high speed for clockwise and counterclockwise rotation. Next, is there any different phase of output signal for clockwise and counterclockwise rotation. Hence, the objective of this experiment is to obtain signal of low, medium and high speed of brushless DC motor in clockwise and counterclockwise rotation and to determine the different phase of the output signal in clockwise and counterclockwise rotation.

Figure 24 shows the digital oscilloscope that had been used for this experiments to obtain the signal. Unfortunately, only two channel oscilloscope is available in the laboratory equipment that make the result output obtain two signals only. Supposedly, the output signal will be displayed three signals for positive, ground and signal from the ESC. But, due to the limitation the output graph will be displayed positive and signal only.

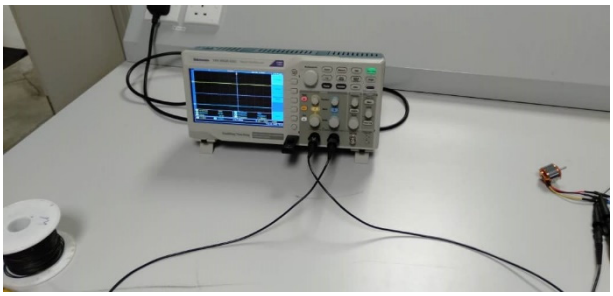

Figure 24. Digital Oscilloscope

Figure 25 shows the connection of the equipment and the digital oscilloscope. The Li-Po battery connected to ESC and brushless dc motor. Then, the signal cable of ESC connected to 6 channel receiver at channel 3. The channel 3 at 6 channel receiver acts as the throttle that will rotate the brushless dc motor transmitter stick. The two probes from digital oscilloscope connected to positive and signal wire of ESC and the output graph will be shown in channel 1 and 2 at digital oscilloscope screen.

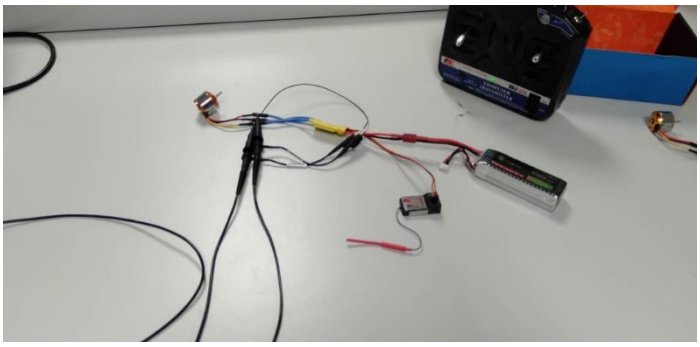

Figure 25. The connection of Equipment and Digital Oscilloscope

Figure 26 to Figure 28 shows the output graph of positive and signal of ESC in low, medium and high speed for counterclockwise rotation. From the output signal, it is shown that the higher the throttle speed, the higher the frequency of the voltage signal. This is because the frequency is inversely proportional to time. For the counterclockwise rotation output graph, it shows that there are a lot of noise generated form that connection from ESC.

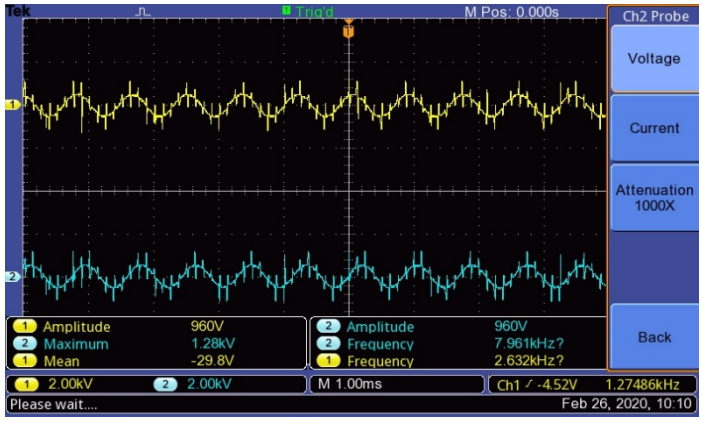

Figure 26. Low Speed of Counter-Clockwise Rotation

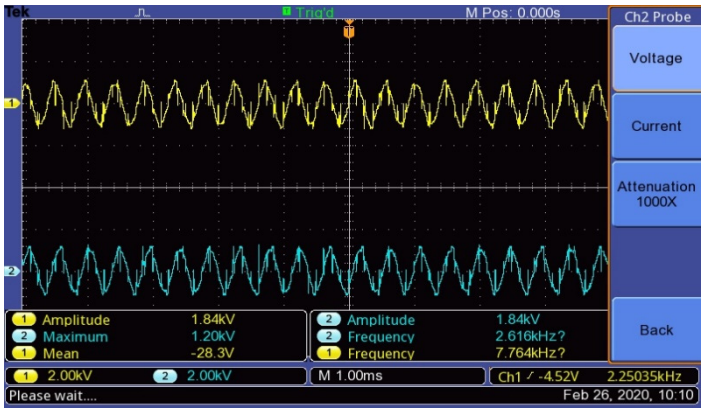

Figure 27. Medium Speed of Counter-Clockwise Rotation

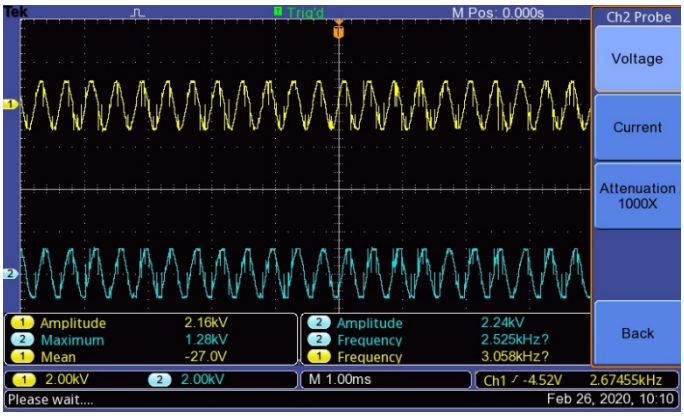

Figure 28. High Speed of Counter-Clockwise Rotation

Figure 29 to Figure 31 shows the output graph of positive and signal of ESC in low, medium and high speed for clockwise rotation. It shows the same phase voltage output signal from the counterclockwise. The only difference for these output voltages signal is clockwise generated less noise from the ESC connection thus prove that there is no different voltage phase signal between counterclockwise and clockwise rotation.

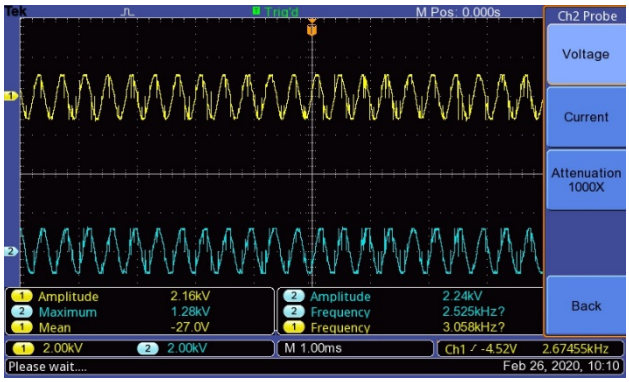

Figure 29. Low Speed of Clockwise Rotation

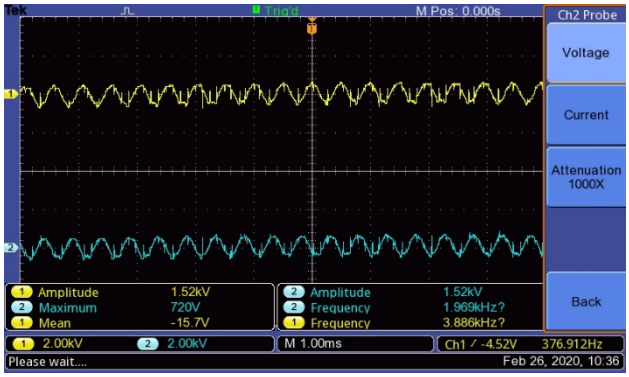

Figure 30. Medium Speed of Clockwise Rotation

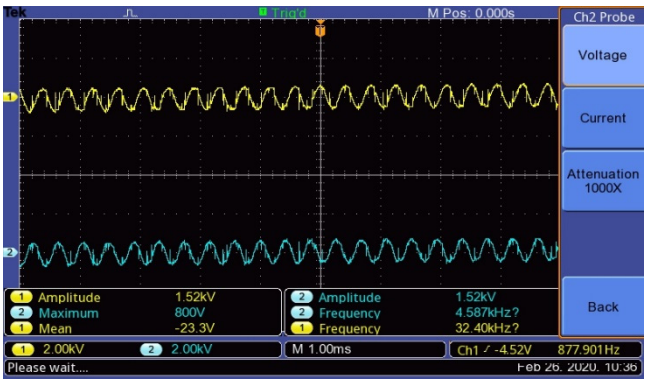

Figure 31. High Speed of Clockwise Rotation

4.5 Quadcopter Functioning and Flight Test

This last experiment will determine whether the quadcopter is functioning or not to perform the flight test. For this last experiment, quadcopter functioning test will consist of three parts which are power up the four motors through single Li-Po battery, binding the 6-channel receiver from transmitter to Arduino UNO and attaching all components to the frame.

Figure 32 shows the four ESC and motors connected individually and attached to the body frame. From the Figure, the body frame motor holder is too small to mount the ESC. So, this quadcopter will be in bulky form from the original view. To power up the 4 motors, the ESC power distributor board need to be connected to each ESC so that the voltage and current signal will be supplied to each motor. Figure 32 shows the ESC power distributor board.

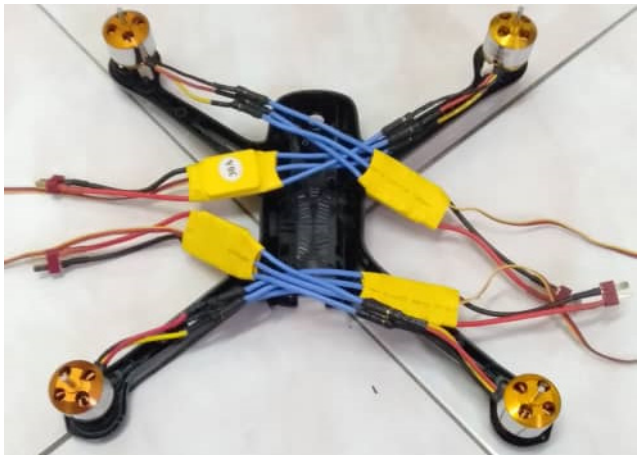

Figure 32. 4 ESC and Motor Attached to the Body Frame

From the Figure 33, there are six ports of transmit and receive power source and signal. For this quadcopter, only four ports will be used as the output only need to run four motors. The power cord from each ESC is connected to the red port individually and the signal wire attached to that 3-pin port. Then, those colored wires will carry the signal to the Arduino UNO from each of the ESC. Then, Arduino UNO will act as the microcontroller that control the speed of motor and formation movement of quadcopter which is throttle, roll, pitch and yaw. After all the connection is correct, the distributor board will connect to 11.1V Li-Po battery as it is the power source for this actuator part.

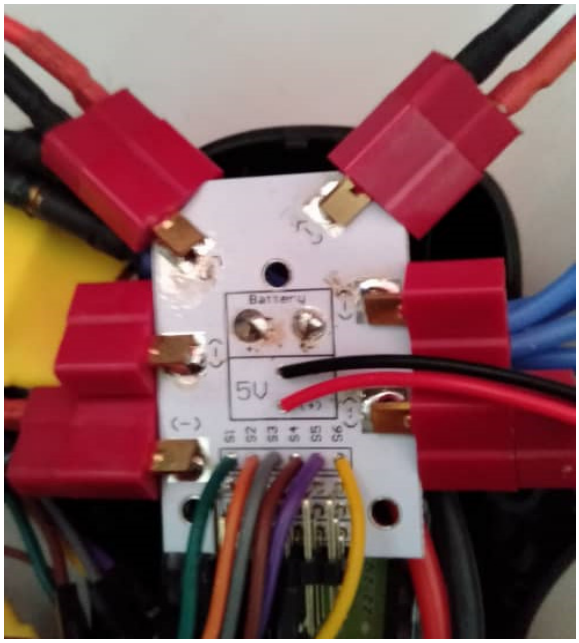

Figure 33. The ESC Power Distributor Board

Figure 34 shows the two receivers were connected to Arduino UNO port which are 6-Channel receiver and MPU-6050 module. The 6-Channel receiver will receive the signal from the wire of ESC power distributor board through Arduino UNO to control the speed of the motor. MPU-6050 module will control the formation movement of quadcopter by detecting the velocity and acceleration from accelerometer and its position using gyroscope. Next, four signal wires from ESC power distributor board connected to port 4 to 7 meanwhile 6-Channel receiver connected to port 8 to 11 of Arduino UNO. Then, Arduino UNO will be supplied by 9V DC battery to power up both receivers by attaching the battery to DC jack port.

Figure 35 shows the inside view of quadcopter components. All component attached to each other according to the designed circuit diagram. The microcontroller part which are Arduino UNO, 6-Channel receiver, MPU-6050 module and 9V battery were placed on the upper body quadcopter as there is no more space beneath it. From the

first and second trial of quadcopter functioning, it works well as the motor detecting the signal and run smoothly. The MPU-6050 module also working well as sensor to detect the velocity, acceleration and angle position of quadcopter as motor reacted well from the transmitter controller. The problem that occurred was 9V battery cannot carry all four motor signals to react to transmitter controller. If the microcontroller part was connected to PC using USB port, it works well as the supply voltage is defined as 12V. So, the solution for this problem is to use 9V battery that can carry high current in mA that can rechargeable.

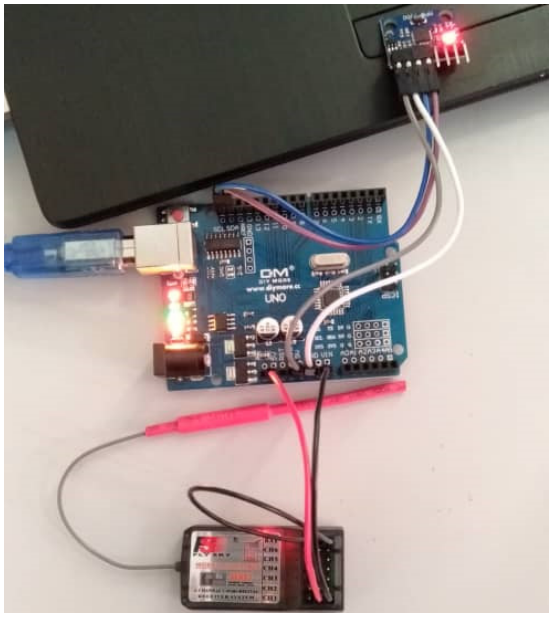

Figure 34. The Transmitter and Receiver of Quadcopter

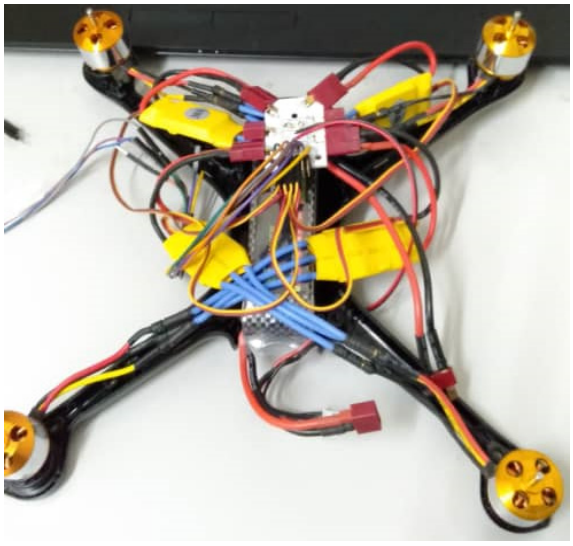

Figure 35. Inside View of the Quadcopter Components

Figure 36 shows the final view of quadcopter components. Figure above shows the quadcopter prototype is almost complete to assemble. All the component attached to the frame body neatly and microcontroller were placed on top of the quadcopter body cover. The microcontroller attached position is perfect to detect the velocity, acceleration and angle position from receiver part. But it will affect the weight of the quadcopter as it will throttle up. From the stress-strain diagram also predicted that both backward holder motor will bend a lot due to excessive weight of Li-Po battery and microcontroller position part. Finally, the flight test cannot be conducted as the logistic problem of the desired 9V battery occurred due to Movement Control Order. The Movement Control Order that initiated by government gave restriction to the logistic centre to prohibit customer self-pick up the package as it can exposure them by Covid-19 disease.

Figure 36. Final View of Quadcopter Components

5. Conclusion

In conclusion almost all of the experiments were successfully performed. For the design of quadcopter body mainframe, the final sketch had already complete including stress-strain diagram while the circuit diagram simulation for DC motor also being done including the configuration of brushless motor hardware connection to ESC. The motor signal test also been success carried out by producing output waveform of clockwise and counterclockwise rotation in low, medium and high speed of motor. The quadcopter functioning test were also approved succeed although the flight test cannot be conducted due to the logistic issue of desired 9V battery.

For future works, this quadcopter can be implemented with high definition, small and light camera that become first-person view (FPV) quadcopter. FPV quadcopter can take pictures and record the video either hold still or fly high in the air. The application for this camera can be contributed to photography, geography observation and security measure.This quadcopter should also be implement with artificial intelligence (AI) manually controlled by user through PID control technique or by AI through fuzzy logic control that consists of fuzzyfication, fuzzy inference and defuzzyfication from the errors and its derivative.

Acknowledgments

The authors also would like to thank Ministry of Education Malaysia (MOE) and Center for Robotics and Industrial Automation, Faculty of Electrical Engineering, Universiti Teknikal Malaysia Melaka (UTeM) for the financial assistance.

References

Abd Rahman, Y. A., Hajibeigy, M. T., Al-Obaidi, A. S. M., & Cheah, K. H. (2018, February). Design and fabrication of small vertical-take-off-landing unmanned aerial vehicle. In *MATEC Web of Conferences* (Vol. 152, p. 02023). EDP Sciences. https://doi.org/10.1051/matecconf/201815202023

Agrawal, K., & Shrivastav, P. (2015). Multi-rotors: A revolution in unmanned aerial vehicle. *International Journal of Science and Research, 4*(11), 1800-1804. https://doi.org/10.21275/v4i11.NOV151540

Boon, M. A., Drijfhout, A. P., & Tesfamichael, S. (2017). Comparison of a fixed-wing and multi-rotor UAV for environmental mapping applications: A case study. *The International Archives of the Photogrammetry, Remote Sensing and Spatial Information Sciences, 42*, 47-54. https://doi.org/10.5194/isprs-archives-XLII-2-W6-47-2017

Cai, G., Dias, J., & Seneviratne, L. (2014). A survey of small-scale unmanned aerial vehicles: Recent advances and future development trends. *Unmanned Systems, 2*(02), 175-199. https://doi.org/10.1142/S2301385014300017

Carholt, O. C., Fresk, E., Andrikopoulos, G., & Nikolakopoulos, G. (2016, June). Design, modelling and control of a single rotor UAV. In *2016 24th Mediterranean Conference on Control and Automation* (MED) (pp. 840-845). IEEE. https://doi.org/10.1109/MED.2016.7536015

Hassanalian, M., & Abdelkefi, A. (2017). Classifications, applications, and design challenges of drones: A review. *Progress in Aerospace Sciences, 91*, 99-131. https://doi.org/10.1016/j.paerosci.2017.04.003

Hwang, M. H., Cha, H. R., & Jung, S. Y. (2018). Practical endurance estimation for minimizing energy consumption of multirotor unmanned aerial vehicles. *Energies, 11*(9), 2221. https://doi.org/10.3390/en11092221

Johansson, A., & Wallén, D. (2016). *Quadcopter Sensor and filter evaluation*.

Kishor, V., & Singh, M. S. (2017). Design and Development of Arduino Uno based Quadcopter. *Int. J. Eng. Manuf. Sci, 7*(1), 14-19.

Mahen, M. A., Anirudh, S., Chethana, H. D., & Shashank, A. C. (2014). Design and development of amphibious quadcopter. *International Journal of Mechanical and Production Engineering, 2*(7), 30-34.

Ostojić, G., Stankovski, S., Tejić, B., Đukić, N., & Tegeltija, S. (2015). Design, control and application of quadcopter. *International Journal of Industrial Engineering and Management, 6*(1), 43. https://doi.org/10.24867/IJIEM-2015-1-106

Rabah, M., Rohan, A., Han, Y. J., & Kim, S. H. (2018). Design of fuzzy-PID controller for quadcopter trajectory-tracking. *International Journal of Fuzzy Logic and Intelligent Systems, 18*(3), 204-213. https://doi.org/10.5391/IJFIS.2018.18.3.204

Rajpoot, A. S., Gadani, N., & Kalathia, S. (2016). Development of arduino based quadcopter. *International Advanced Research Journal in Science, Engineering and Technology, 3*(6), 252-259.

Sababha, B. H., Zu'bi, H. M. A., & Rawashdeh, O. A. (2015). A rotor-tilt-free tricopter UAV: design, modelling, and stability control. *International Journal of Mechatronics and Automation, 5*(2-3), 107-113. https://doi.org/10.1504/IJMA.2015.075956

Sharma, A., & Barve, A. (2012). Controlling of quad-rotor uav using pid controller and fuzzy logic controller. *International Journal of electrical, electronics and computer engineering, 1*(2), 38-41.

Shenoy, T. P., Shenoy, K. P., Khan, L., Aziz, S., Afran, S., & Kumar, K. (2018). Design and development of a novel triphibian quadcopter. *International Journal of Engineering & Technology, 7*(2.21), 1-4. https://doi.org/10.14419/ijet.v7i2.21.11822

Srivastava, P., Ninawe, T., Puthran, C., & Nirgude, V. (2017). Quadcopter for rescue missions and surveillance. *IOSR Journal of Computer Engineering (IOSR-JCE),* 48-52.

Šustek, M., & Úředníček, Z. (2018). The basics of quadcopter anatomy. In *MATEC Web of Conferences* (Vol. 210, p. 01001). EDP Sciences. https://doi.org/10.1051/matecconf/201821001001

Thu, K. M., & Gavrilov, A. I. (2017). Designing and modeling of quadcopter control system using L1 adaptive control. *Procedia Computer Science, 103*, 528-535. https://doi.org/10.1016/j.procs.2017.01.046

Yu, J. (2018). Design and optimization of wing structure for a fixed-wing unmanned aerial vehicle (UAV). *Modern Mechanical Engineering, 8*(04), 249-263. https://doi.org/10.4236/mme.2018.84017