Environment and Pollution; Vol. 13, No. 2; 2024
ISSN 1927-0909 E-ISSN 1927-0917
Published by Canadian Center of Science and Education

The Impact of Long-Term (4 Months) Exposure to Low pH and Elevated Temperature on the Growth Rate of Gold Mollies' (*Poecilia Sphenops*) Larvae

Rostern Tembo[1]

[1] Regent University, USA

Correspondence: Dr. Rostern Tembo, Assistant Professor (Anatomy and Physiology and Immunology), Regent University, 1000 Regent University Drive, Virginia VA 23464. USA. E-mail: rtembo@regent.edu

Received: May 24, 2024 Accepted: July 12, 2024 Online Published: July 15, 2024

doi:10.5539/ep.v13n2p1 URL: https://doi.org/10.5539/ep.v13n2p1

Abstract

Researchers in the marine ecosystem have documented the significant impacts that anthropogenic ocean acidification has on marine organisms. These include olfactory abilities in fish, impaired behavioral as well as physiological changes, including anti-predatory response leading to consequences in population dynamics and community structure. In this research, we endeavored to investigate and compare the growth rate of the gold mollies (*Poecialia sphenops*) larvae under a low pH of 5 water temperature of 28 ^{O}C, and a pH of 6.9 at a water temperature of 26 ^{O} conditions. The mollies larvae were weighed for four months (August, September, October, and November) and the data collected was analyzed using the Statistical Package for Social Sciences (IBM SPSS). The analysis was a multivariate test for a more complete examination of data by looking at independent variables and their relationship to one another. There was no statistically significant difference in the growth rate in August (p-value 0.969) and September (p-value 0.286) between the larvae in aquarium A (experimental) and those in aquarium D (control) at the beginning of the experiment. But there was a statistically significant difference in the third (3) month (October) P-value = 0.007 and in the fourth month (4) (November) P-value = 0.004. The low pH of 5 impacted the growth rate of the Poecilia sphenops larvae while those in the control aquarium pH of 6.9 seemed to have not been affected and grew well.

Keywords: ocean acidification, pH 5, pH 6.9, *Poecilia sphenops*, low pH, larvae, aquarium

1. Introduction

Anthropogenic activities resulting in acid rain (sulfuric acid and nitric acids derived from oxides of sulfur and nitrogen) plus the increased atmospheric concentration of carbon dioxide have led to changes in the chemistry of oceans and seawater consequently lowering the pH. Carbon dioxide concentration was beyond 400 ppm in 2017, a level that had never been attained in 800,000 years [1]. The CO_2 concentration is expected to be between 750 and 1000 ppm by the year 2100. The current carbon dioxide emissions into the atmosphere amount to about 40 billion tons per year [2]. Of late there has been a volume of research documenting the unprecedented levels of carbon dioxide emissions from the surface of the earth which end up being absorbed by oceans of the world making the oceans acidified and their pH decreasing, while at the same time changing our climate patterns [3]. Since the Industrial Revolution, approximately 142 billion tons of anthropogenic carbon dioxide have been absorbed by the oceans, resulting in ocean acidification at a rate far faster than at any time in the last 650,000 years [4]. The combined effect of acid rain plus carbon dioxide emissions may have a profound impact on aquatic organisms such as fish, as ocean acidification intensifies lowering the ocean pH.

Carbon dioxide: (CO_2 (g) + H_2O (l) ↔ H_2CO_3 (aq) H20CO3 (aq) ↔HCO_3- (aq) + H^+).

Oxide of nitrogen: $2NO_{2(}g)$ + O_2 (g) => $2NO_2$, $2NO_2$ (g) + H_20 = HNO_2 + HNO_3 (aq).

Oxide of sulfur: SO_2 (g) + H_2O (aq) => H_2SO_3 (aq), H_2SO_3 (aq) + O_2 (g) => H_2SO_4 (aq)

On the other hand, the increase in carbon dioxide concentration in the atmosphere contributes to global warming and increases surface water temperatures. There are a few predictions that have been made on how the climate will change by the year 2100. Water bodies in lakes and seas will experience high temperatures of 30 ^{0}C by July 2100 [5]. If this prediction occurs in lakes that are found in the Northern Hemisphere, there will be much more stress on

the fish that are adapted to cold waters [6]. The climate change itself may cause a positive feedback loop in which the increase in temperature could magnify the release of more carbon dioxide from both land and aquatic sinks precipitating more temperature increase.

Over the past 15 years, biologists have documented substantial negative effects of ocean acidification on marine biota [7]. With more than 300 papers published per year from 2006 to 2015, the exponential growth of studies in this field is unprecedented in the marine sciences [8]. In recent years, however, there has been increasing skepticism and uncertainty around the severity of ocean acidification's effects on marine organisms [9]. Can acclimation and adaptation of these marine organisms to ocean acidification be consequential? The adaptation in some marine organisms may be very quick resulting in their survival, while in others their adaptations may be too slow, (especially among long-lived species) [10] resulting in potentially meeting their fate in the process. Which marine organisms may adapt quickly to ocean acidification and temperature rise in surface waters and which ones would have a slow adaptation is open to more research. Do these two stressors (acidification of oceans and elevated water surface temperature) affect both Physiology (muscle development, reduced cardiac output, etc.) and behavior (eating, anti-predator response, altered olfactory response) changes equally or not?

In this research, we investigated how the impact of long-term (4 months) exposure to low pH and elevated temperature affected the growth rate of gold mollies' (*Poecilia sphenops*) larvae. The choice for gold mollies (*Poecilia sphenops*) in this research was twofold (a) their quick reproduction rate. They don't lay eggs they are viviparous (give birth to live larvae (fry)). They are a tropical type of fish and survive well at a temperature of between 22-27 degrees Celsius. (b) their quick adaptation to different environmental conditions. This species of Molly is the smallest of the three species, males will only reach 76 mm (3 inches) while females will reach 101.6 mm (4 inches). They are very easy to keep a big number in one tank, females are slightly bigger than males.

2. Methods and Materials

The fish (gold mollies) was bought from a local commercial supplier – Jungle Aquatics (within Virginia Beach, in Virginia. USA), and housed in six (6) aquaria (76 X 31 X 47 cm) (29 gallons =110 L) marked A, B, C, D, E, and F. Aquarium A was an experimental tank and was kept at a temperature of 28 ^{O}C and a pH of 5. The normal temperature range of these freshwater fish is between 73 ^{O}F and 83 ^{O}F (22 ^{O}C – 27 ^{O}C). According to The Intergovernmental Panel on Climate Change (IPCC) the worst scenario of pathway 8.5 (RCP8.5), projects that the warming of the ocean water surface temperature of 3.04 ± 0.62 ^{O}C and an acidification of 0.38 ± 0.04 pH units by 2100 [11]. This kind of change in environmental conditions can affect not only the behavior of aquatic organisms like fish but their growth and mortality as well. Hence our choice of using such low pH and elevated temperature to simulate the IPCC RCP8.5 scenario projected for 2100 [12]. Aquarium B contained fish fries (larvae) that had just been born. The water in aquarium B was at pH 7 and a temperature of 25 ^{O}C. It was in this tank where small larvae were kept once adult fish had given birth. The larvae were removed immediately from the tank in which they were born to avoid being eaten by the adult fish. This is typical with gold mollies; they tend to eat their babies. Ten (10) of the larvae from Aquarium B, were taken into Aquaria A, and another 10 into aquaria D for experimentation trial one week after they were born. These aquaria A and D were compartmentalized using divides so that each compartment had only one larva. The water was at pH 5 and the same temperature of 28 ^{O}C in all compartments for Aquaria A (fig. 1). In Aquaria D the water was at pH 6.9 and temperature at 26 ^{O}C in all compartments. Aquaria A was an experimental tank while D was a control tank. Aquaria C and F had the same number of adult fish - (15) and were reproduction tanks kept at a pH of 7. In all aquaria, temperature conditions were kept constant by using thermostats controlling submersible heaters set either at 26 ^{O}C or 28 ^{O}C as stated above. In the RCP 8.5 scenario, the surface water becomes 4-5 ^{O}C warmer towards the end of the twenty-first century compared to present-day conditions [13], and acidification 0.3-0.4 pH units [14].

The larvae were fed twice a day on tropical fish flakes - veggie flakes and Vibra bites, 0.8 g where the fish was five, 2.4 g in aquaria where the fish was fifteen, and 3.2g in aquarium where the fish was 20-22. The remains of the food and the mollies' waste (ammonia) products could push the water pH up and to avoid elevating the pH, Biofilters were installed in all aquaria. The biofilters had cartridges that contained Nitrosomonas and Nitrobacter bacteria which were responsible for the oxidation of ammonium to nitrite (Nitrosomonas) and Nitrite to nitrate (Nitrobacter) in the aquaria. We also installed air pumps that bubbled air into all the aquaria to ensure enough 10 ppm of dissolved oxygen was maintained. The fish larvae were climatized for one week before undergoing experimentation. The experimental water was drawn from the tap into a 166 L (44-gallon) drum and 10 cm^3 of concentrated Prime solution was added to remove chlorine and chloramine from the water and then the water was poured into aquaria two days before the fish was brought in. The aquaria were three-quarters filled with (83 L) dechlorinated water from a 166 L (44-gallon) drum. Analytical grade sulfuric acid (1 N) 96.3 % purity (J. T. Baker) was used to lower the pH to the desired value of either pH 5 or pH 6.9. A buffer, MES (morpholinoethanesulfonic

acid) was added to both experimental and control aquaria to maintain a constant desired pH. The pH was checked every week using a pH meter to ensure that the pH was constantly the same. The aquaria were cleaned every weekend, and half of the old water was removed and replaced with fresh dechlorinated water. 50 g of Aquarium salt was always added after replacing old water with fresh dechlorinated water to provide essential electrolytes, improve gill function, and facilitate osmoregulation and disease recovery. Being freshwater species of fish the aquarium salt added salinity present in their natural environment.

The initial weight of the larvae was in August when the experiment started. Each larva was scooped from the aquarium into a 500 ml beaker of water using a small scooping net. Water was put into a 200 ml beaker to a 100 ml mark and weighed using an electronic balance scale (XPR204S Mettler Toledo, OH. USA) (initial weight). Then each larva was again scooped from a 500 ml beaker and put on a blotting paper which absorbs water and quickly put into the weighed 200 ml beaker on a weighing scale and the final weight of the 200 ml beaker with 100 ml water plus the larva was calculated (final weight). The final weight minus the initial weight was the weight of the larva to the nearest milligram (± 1). This method was repeated for all 10 trials of larvae in Aquarium A (experimental) and the 10 trials of larvae from Aquarium D (control). When the weighing was over the larvae were returned to their respective aquaria and 10 ml of a liquid called stress coat which reduces fish stress was added to the aquaria to lessen the stress the larvae experienced during the weighing period. This method was repeated in September, October, and November. The larvae were weighed for four months to see if there was any difference in the growth rate between the larvae in aquarium A with pH 5 at 28 ^{O} C and the larvae kept in the control aquarium D with a pH of 6.9 and temperature of 26 ^{O} C.

3. Observations

The main parameter we looked at was the growth rate in terms of the biomass of these larvae in the experimental and the control aquaria during the four months. Other minor parameters such as i. Sensitivity, ii. Eating habits, iii. Mortality was observed.

Experimental aquaria A

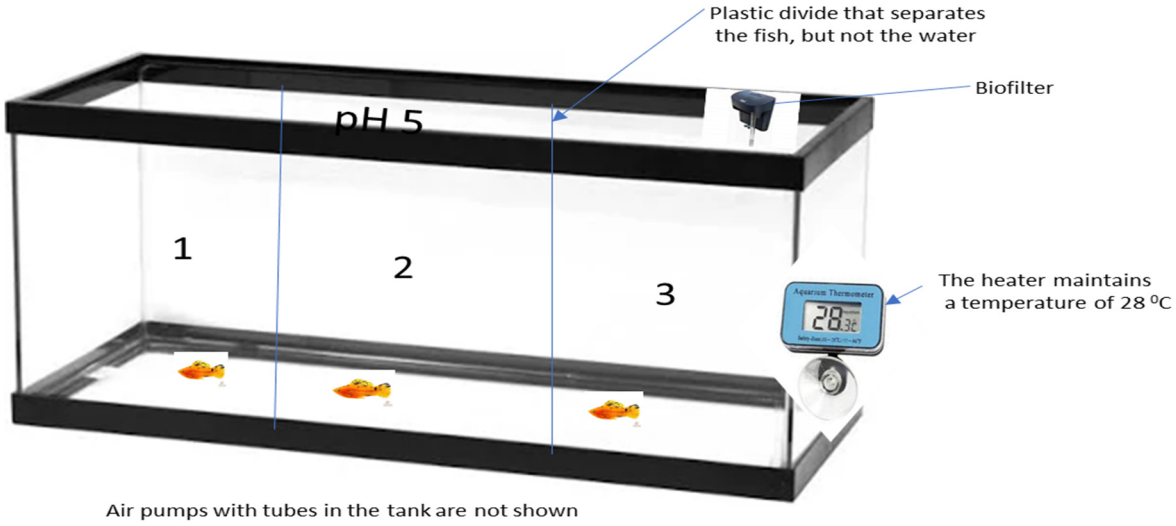

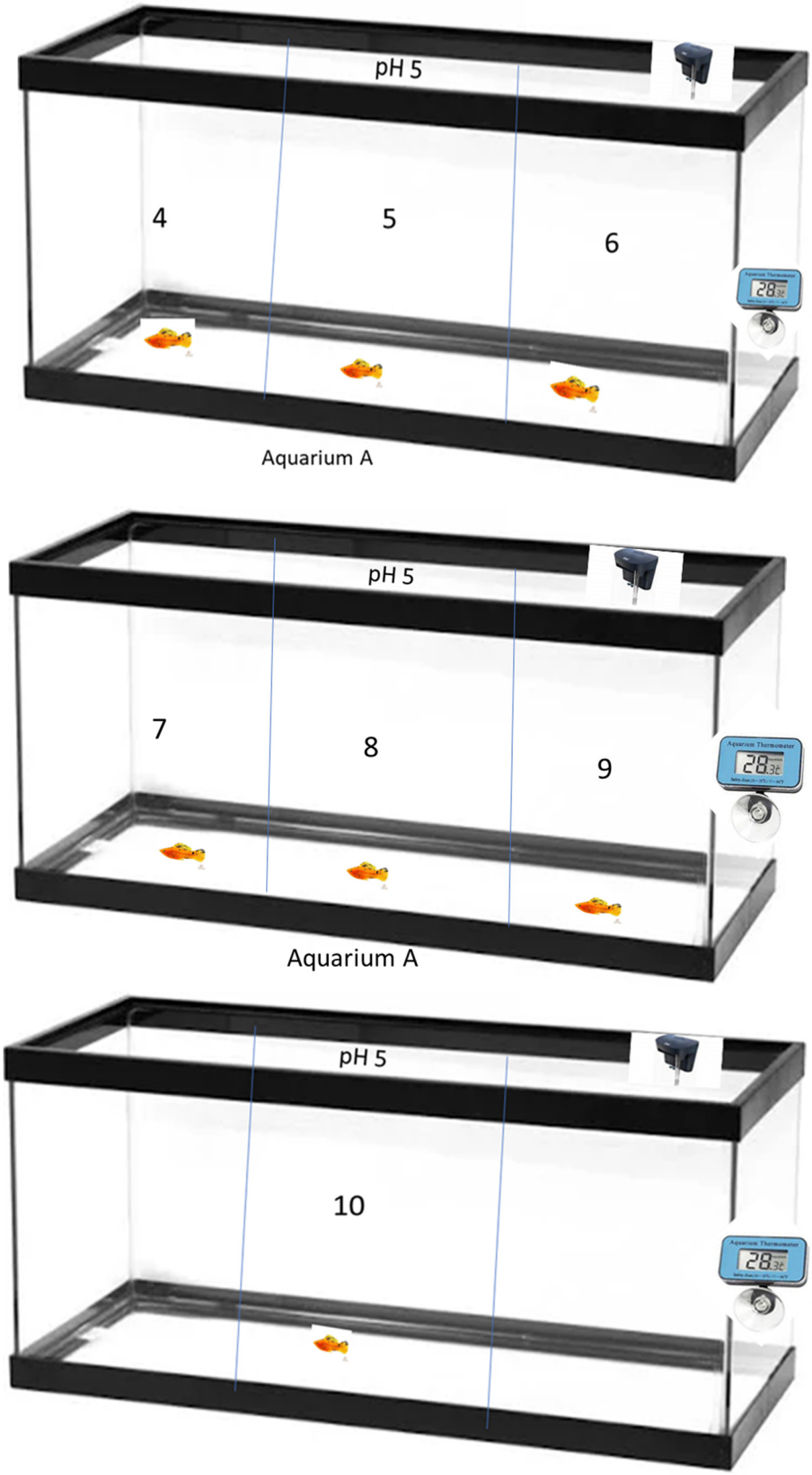

Figure 1a. All four are aquaria A with a pH of 5 and a temperature of 28 0C

The Control aquaria D

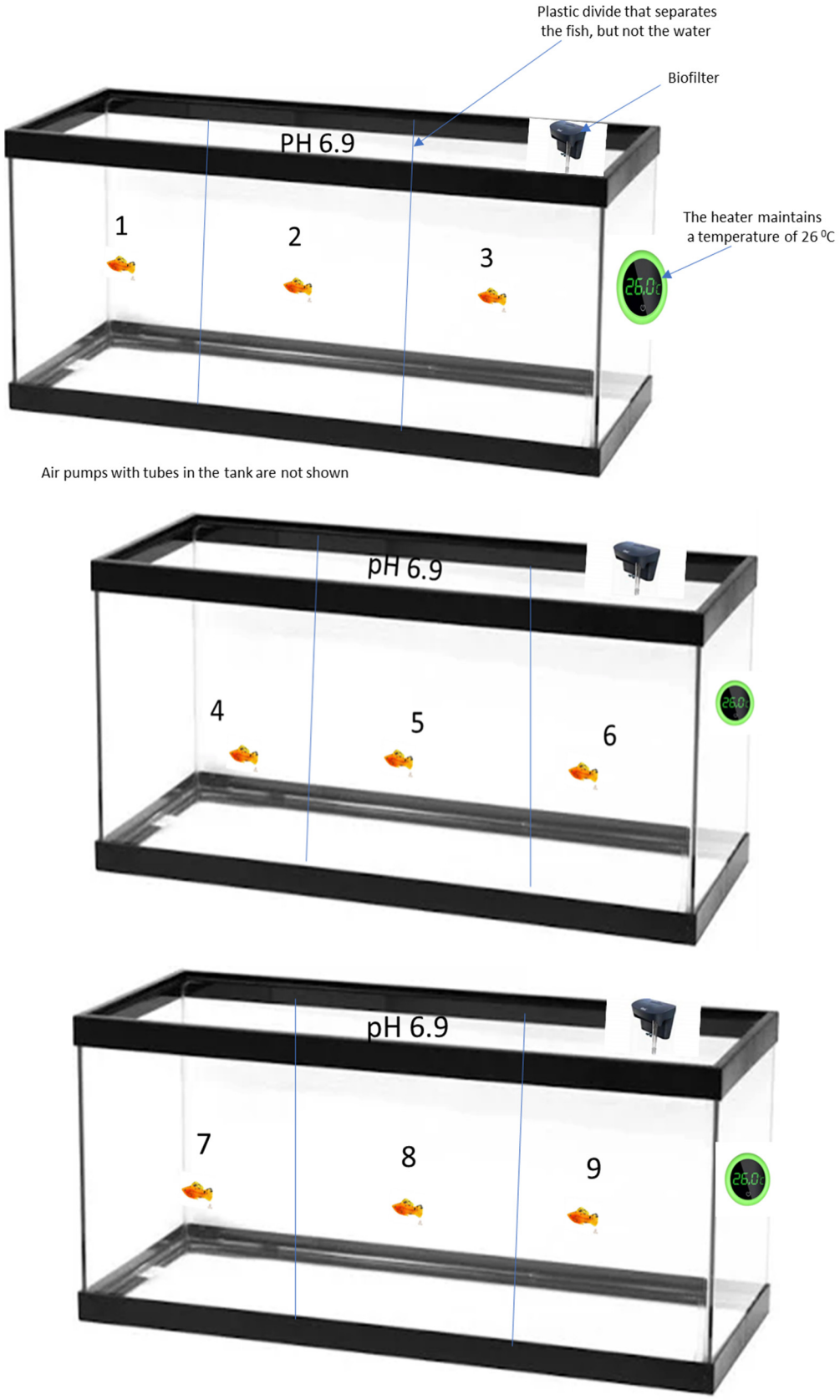

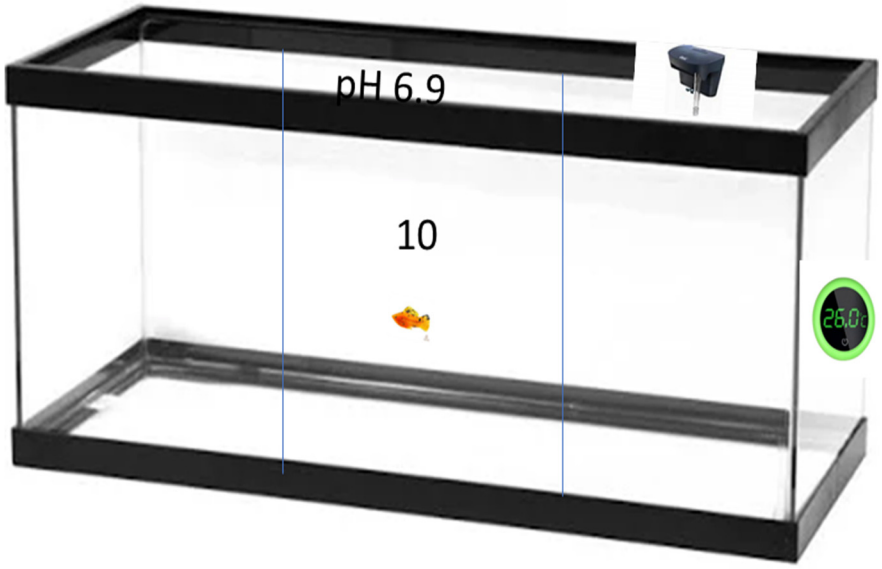

Figure 1b. All four are aquaria D with a pH of 6.9 and a temperature of 26 ^{0}C

4. The Results

There was no mortality for the larvae in both pH 5 and pH 6.9 aquaria during the study period. This is very important to note because if no mortality at pH 5 for this type of larvae fish it means they will survive under the RCP8.5 scenario despite a slow growth rate. After all, the pH 5 was a worse scenario than that of the scenario pathway 8.5 (RCP8.5) predicted by the Intergovernmental Panel on Climate Change. There was though a difference in sensitivity. The larvae in the aquarium with pH 5 were very sensitive to anything that was dropped into the aquarium, they would swim away faster than the larvae in the control aquarium with pH 6.9. They would eat their food more quickly than those in the control aquarium (pH 6.9). This is obvious because the aquarium with pH 5 also had an elevated temperature of 28 ^{O} C. Increased temperature automatically raised the larvae's metabolic rate. It is expected that increased water temperature increases the larvae's metabolic rate and can have an impact on their daily food requirements to maintain a steady growth rate.

The statistical analysis of the growth rate of the gold mollies larvae was conducted by using the statistical package for the Social Sciences commonly known as IBM SPSS. The analysis was a multivariate test (mixed method ANOVA) for a more complete examination of data by looking at independent variables and their relationship to one another. This method was most appropriate because we had two different groups (pH 5 and pH 6.9) and we had repeated measures where each group was tested over different time points.

Pairwise Comparisons

Measure: Growth_Rate

Time	(I) Group	(J) Group	Mean Difference (I-J)	Std. Error	Sig.[b]	95% Confidence Interval for Difference[b] Lower Bound	Upper Bound
1	pH 5	pH 6.9	.000	.003	.969	-.005	.005
	pH 6.9	pH 5	.000	.003	.969	-.005	.005
2	pH 5	pH 6.9	-.015	.014	.286	-.044	.014
	pH 6.9	pH 5	.015	.014	.286	-.014	.044
3	pH 5	pH 6.9	-.512*	.169	.007	-.868	-.156
	pH 6.9	pH 5	.512*	.169	.007	.156	.868
4	pH 5	pH 6.9	-.655*	.197	.004	-1.068	-.242
	pH 6.9	pH 5	.655*	.197	.004	.242	1.068

Based on estimated marginal means

*. The mean difference is significant at the .05 level.

b. Adjustment for multiple comparisons: Bonferroni.

Figure 2: Time: 1 = August 2 = September 3 = October, and 4 = November

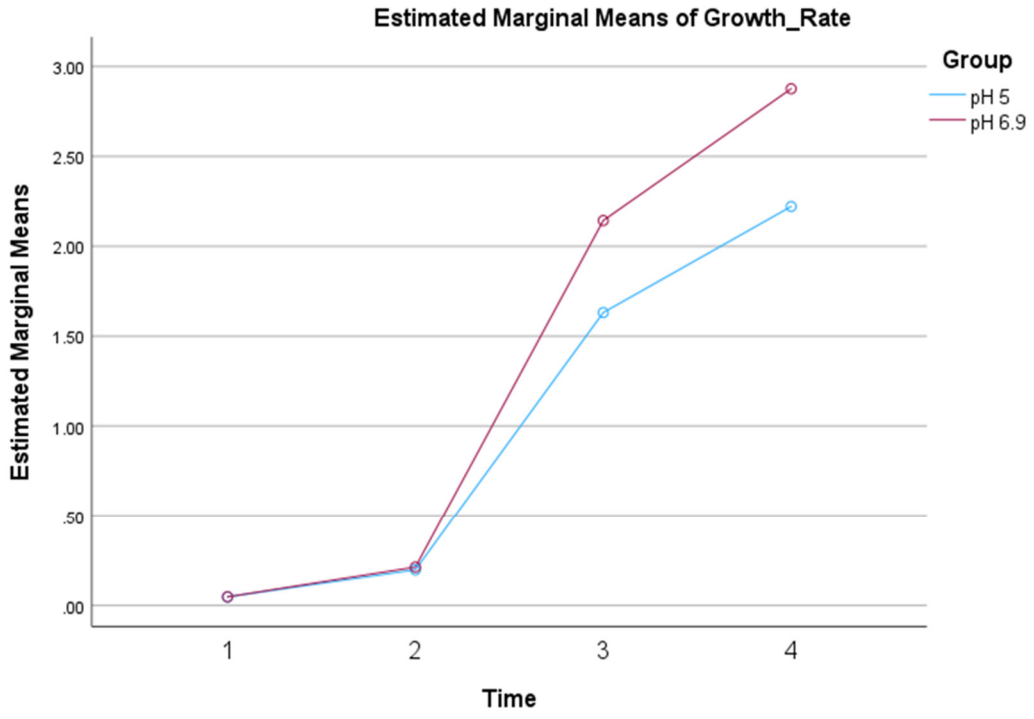

Figure 3: Profile plots of means. 1 = August 2 = September 3 = October and 4 = November

There was no statistically significant difference in the growth rate in August (p-value 0.969) and September (p-value 0.286) between the larvae in aquarium A (experimental) and those in aquarium D (control) at the beginning of the experiment. But there was a statistically significant difference in the third (3) month (October) P-value = 0.007 and in the fourth month (4) (November) P-value = 0.004. This is also well illustrated in the graph (figure 3) above. If the data had been collected for five or six months instead of just four months, the significant difference

in the growth rate of these two groups of larvae would have been larger than this shown here.

5. Discussion and Conclusion

The low pH of 5 and elevated temperature of 28 ^{O}C impacted the growth rate of the *Poecilia sphenops* larvae while those in the control aquarium pH of 6.9 and temperature of 26 ^{O}C were not affected and were growing well. The explanation for the larvae's slow rate of growth in aquarium A with a pH 5, could be attributed to both (1) the raised temperature (28 ^{O}C) increased metabolic rate and daily energy requirements and the fish needed to eat more food to maintain the energy for growth [15]. The larvae had reduced the allocation of energy to some activities like growth to use it elsewhere like maintaining the acid-base balance. (2) Ocean Acidification research studies have reported several effects on larval physiology such as acid-base balance, and metabolism, including tissue damage and behavioral processes in European sea bass [16], [17], [18], [19]. Ventilation in fish is aligned with the need for oxygen intake from the gills of low oxygen content, therefore, to compensate for acid-base balance (in low pH) using the respiratory system is insufficient. The only way is the Linchpin of acid-base regulation which is the transfer of acid-base components (H^+ and $HCO3^-$) between the fish and the acidic environment through the gills. The uptake of Na^+ or Cl^- from the environment by the fish in exchange for the body's internal H^+ or HCO_3^- enables the fish to achieve the required acid-base balance and maintain the ion regulatory homeostasis by obtaining NaCl from the surrounding low pH water environment [20]. This process requires energy or ATP. In the early stages of development, this process can be vulnerable in low pH because the larvae's acid-base competency is not fully developed, hence the slow growth rate. Therefore, both elevated temperature leading to increased metabolic rate and low pH that led to the acid-base regulatory process played a part in the slow growth rate of the *Poecilia sphenops* larvae.

Other researchers have reported that there is increased growth in marine larvae and newly settled juvenile fish in acidified water [21], [22], [23]. Philip, L. Munday et. Al. 2009 [24], stated that "larvae from some groups of fish were potentially at a selective advantage when they were exposed to low pH, and other larvae grew larger under acidified conditions. Other groups were not affected by the acidification of water." This, therefore, means that fish larvae's sensitivity to ocean acidification and elevated temperature in the early stages of growth is largely species-specific and based on their ecological plasticity. Since the larvae in Aquarium A at 28 ^{O}C were sensitive and swimming faster means that high temperatures of 28 ^{O}C can cause stress and decrease the oxygen-carrying capacity of the blood affecting the larvae's physiology and affecting oxygen transport and delivery to tissues. Temperatures above 28 ^{O}C can lead to the larvae's cellular damage [25] enzymes break down and some organ failure leading to a decrease in the rate of growth, and death impacting the population dynamics in the ecosystem. Enzymes as biological catalysts are affected by changes in pH that deviate from the optimum. The enzyme configuration changes, thereby diminishing the substrate's capability [26] to attach to the active site of the enzyme. Such changes in optimal pH of between 6 - 8 for this type of larvae to low pH pH 5 in this case impeded the digestive process affecting the absorption of nutrients and larvae growth and sexual maturity as the larvae experience acidosis. This is how both elevated temperature and low pH slowed down the growth rate of the *Poecilia sphenops* larvae, and not only this species of larvae but many other species of fish larvae may be impacted similarly in their populations and ecosystems as Ocean acidification and global warming continues.

References

1. Lüthi, D. et al. (2008). High-Resolution Carbon Dioxide Concentration Record 650,000–800,000 Years Before Present. *Nature, 453*, 379-382. https://doi.org/10.1038/nature06949

2. Friedlingstein, P. et al. (2023). Global Carbon Budget 2023. *Earth System Science Data, 15*(12), 5301-5369. https://doi.org/10.5194/essd-15-5301-2023

3. Munday, P. L. et al. (2016). Effects of elevated CO2 on early life history development of yellowtail kingfish, seriola lalandi, a large pelagic fish. *ICES Journal of Marine Science, 73*(3), 641-649. https://doi.org/10.1093/icesjms/fsv210

4. Simpson, S. D. et al. (2011). *Global Change Biology. Ocean acidification erodes crucial auditory behavior in Marine fish.* Biology letters. https://doi.org/10.1098/rsbl.2011.0293

5. Mortsch, L. D., & Quinn, F. H. (1996). Climate change scenarios for Great lakes basin ecosystem studies. *Limnol. Oceanogr., 41*(5), 903-911. https://doi.org/10.4319/lo.1996.41.5.0903

6. Rahel, F. J., & Olden, J. D. (n.d.). Assessing the effects of Climate Change on Aquatic Invasive Species. *Conservation Biology, 22*(3), 521-533. https://doi.org/10.1111/j.1523-1739.2008.00950.x

7. Kroecker, K. J., Kordas, R. L., Crim, R. N., & Singh, G. G. (2010). Meata-analysis reveals negative yet variable effects of ocean acidification on marine organisms. *Ecol. Lett., 13*, 1419-1434. https://doi.org/10.1111/j.1461-0248.2010.01518.x

8. Dixson, D. L. et al. (2008). Coral reef fish smell leaves to find island homes. *Royal Society. Biological Sciences, 275*(1653). https://doi.org/10.1098/rspb.2008.0876

9. Browman, H. I. (2016). Applying Organized Scepticism to Ocean Acidification Research. *ICES Journal of Marine Science, 73*(3), 529-536. https://doi.org/10.1093/icesjms/fsw010

10. P€ortner, H.-O. et al. (2014). Ocean systems. In C. B. Field et al. (Eds.), *Climate change 2014: impacts, adaptation, and vulnerability. Part A: global and sectoral aspects. Contributions of Working Group II to the fifth assessment report of the Intergovernmental Panel on Climate Change* (pp. 411-484). Cambridge University Press, Cambridge, and New York, New York, USA.

11. Intergovernmental Panel on Climate Change (IPCC). (2013). Climate Change 2013. The Physical Science Basis. https://doi.org/10.1017/CBO9781107415324

12. Hans, O. P. (2008). Ecosystem effects of ocean acidification in times of ocean warming: a Physiologist view. *Marine ecology progress series, 373*, 203-217. https://doi.org/10.3354/meps07768

13. Gustafsson, E. et al. (2023). Causes and consequences of acidification in the Baltic Sea: implications for monitoring and management. Scientific Reports. 13:16322 Nature portfolio. https://doi.org/10.1038/s41598-023-43596-8

14. Devergne, J. et al. (2023). Impacts of Long-Term Exposure to Ocean Acidification and Warming on Three-Spined Stickleback (Gasterosteus aculeatus) Growth and Reproduction. *Fishes, 8*, 523. https://doi.org/10.3390/fishes8100523

15. Zahorska, E. (2016). Climate warming and invasive fish species: Will they replace native fish in water's of temperate zones. *Biologia, 71*(7), 727-735. https://doi.org/10.1515/biolog-2016-0101

16. Melzner, F. et al. (2009). Physiological basis for high CO2 tolerance in marine ectothermic animals: Pre-adaptation through lifestyle and ontogeny. *Biogeosciences, 6*, 2313-2331. https://doi.org/10.5194/bg-6-2313-2009

17. Forsgren, E. et al. (2013). Elevated CO2 affects embryonic development and larval photoaxis in temperate marine fish. *Eco Evol, 3*, 3637-3646. https://doi.org/10.1002/ece3.709

18. Frommel, A. Y. et al. (2014). Organ damage in Atlantic herring larvae as a result of ocean acidification. *Ecol Appl, 24*, 1131-1143. https://doi.org/10.1890/13-0297.1

19. Crespel, A. et al. (2017). The development of contemporary European sea bass larvae (Dicentrarchus labrax) is not affected by projected ocean acidification scenarios. *Mar Biol,* 164-155. https://doi.org/10.1007/s00227-017-3178-x

20. Tembo, R. (2021). The Mechanism of Chemoreception in Fish under Low pH Condition. *J. Environ Anal Toxicol, 11*(S6).

21. Searcy, S. P., & Sponaugle, S. (2000). Variable Larvae growth in a coral reef fish. *Mar. Ecol. Prog. Ser 206*, 213-226. https://doi.org/10.3354/meps206213

22. Bergenius, M. A. J. et al. (2002). Larval growth predicts the recruitment success of coral reef fish. *Oecologia, 131*, 521-525. https://doi.org/10.1007/s00442-002-0918-4

23. Meekan, M. G. et al. (2003). What determines the growth of tropical reef fish larvae in plankton: Food or temperature. *Mar. Ecol. Prog. Ser. 256*, 193-204. https://doi.org/10.3354/meps256193

24. Philip, L. M. et al. (2009). Effects of ocean acidification on the early life history of a tropical marine fish. *Proc. Royal. Soc., 276*, 3275-3283. https://doi.org/10.1098/rspb.2009.0784

25. Marium, A. et al. (2023). Effect of Temperature, pH, Salinity, and Dissolved Oxygen on Fishes. *Journal of Zoology and Systematics.* https://doi.org/10.56946/jzs.v1i2.198

26. Wang, X. Y., & Lee, J. K. (2021). Digestive Enzyme Activities and pH Levels: Their relationship in Fish Nutrition. *Aquaculture Nutrition, 15*(2), 110-122.

Acknowledgments

I greatly appreciate the valuable contributions of the following people:

Dr. Anna Ord (Dean of the college of Health and Behavioral Sciences at Regent University) for her expertise into the Statistical Package for Social Sciences (SPSS) who helped me greatly in statistical analysis.

Samara Adams and Eleina R. Flowers (honors students) who helped me tremendously in weighing the larvae and seldom feeding the fish.

Authors contributions

Dr. Rostern Tembo was responsible for study design and revising the manuscript.

Funding

This work was supported by Regent University faculty research grant. Also, Angela Gast worked hard to help in procuring and making payments for the materials needed for this research.

Competing interests

The author declares no known competing financial interests or personal relationships that could have appeared to influence the work reported in this paper.

Informed consent

Obtained.

Ethics approval

The Publication Ethics Committee of the Canadian Center of Science and Education.

The journal's policies adhere to the Core Practices established by the Committee on Publication Ethics (COPE).

Provenance and peer review

Not commissioned; externally double-blind peer reviewed.

Data availability statement

The data that support the findings of this study are available on request from the corresponding author. The data are not publicly available due to privacy or ethical restrictions.

Data sharing statement

No additional data are available.

Open access

This is an open-access article distributed under the terms and conditions of the Creative Commons Attribution license (http://creativecommons.org/licenses/by/4.0/).

Copyrights

Copyright for this article is retained by the author(s), with first publication rights granted to the journal.