Modern Applied Science

www.ccsenet.org/journal.html

Vol. 3, No. 6

June 2009

The Effect of Radial Swirl Generator on Reducing Emissions from Bio-Fuel Burner System

Mohamad Shaiful Ashrul Ishak

School of Manufacturing Engineering, Universiti Malaysia Perlis

PO Box 77, Pejabat Pos Besar, 01000 Kangar, Perlis, Malaysia

Tel: 60-4-985-1778 E-mail: mshaiful@unimap.edu.my

Mohammad Nazri Mohd Jaafar (Corresponding author)

Department of Aeronautical Engineering, Faculty of Mechanical Engineering

Universiti Teknologi Malaysia, 81310 Skudai, Johor Malaysia

Tel: 60-7-553-4851 E-mail: nazri@fkm.utm.my

Yehia A. Eldrainy

Department of Aeronautical Engineering, Faculty of Mechanical Engineering

Universiti Teknologi Malaysia, 81310 Skudai, Johor Malaysia

Tel: 60-7-553-5843 E-mail: yeldrainy@yahoo.com

Abstract

A liquid bio-fuel burner system with various radial air swirlers attached to combustion chamber of 280 mm inside diameter and 1000 mm length has been investigated. All tests were conducted using crude palm oil as fuel. A radial flow air swirler with curved blades having 50 mm outlet diameter was inserted at the inlet plane of the combustor to produce swirling flow. Fuel was injected at the back plate of the swirler outlet using central fuel injector with single fuel nozzle pointing axially outwards. The swirler vane angles and equivalence ratios were varied. Tests were carried out using four different air swirlers having 45°, 50°, 60°and 70° vane angles. NOx emissions reduction of about 12 percent was obtained at swirl number of 1.911 as compared to 0.780 at the same equivalence ratio of 0.83. In addition, emission of carbon monoxide decreased as the swirl number increased. The results shows that a proper design of air swirler has a great effect on mixing process and hence the combustion and emission.

Keywords: Swirler, Pressure drop, Swirl number, Combustion, NOx emission

1. Introduction

Burners are usually used in industrial applications such as starters for boilers, district heating and cooling and also for domestic central heating system. However, bio-fuel conventional burners, operating at or above stoichiometric air/fuel ratios, produce high flame temperatures that resulted in the production of nitrogen oxides, which is then emitted to the atmosphere (Craig, 1975). However, lowering NOx emission by reducing flame temperature will lead to reduced flame stability or increase in Carbon Monoxide (CO) emission (Khezzar, 1998). Therefore, a method must be found that will be able to reduce the time for peak temperature and will reduce the formation of NOx.

Basically there are two techniques of controlling NOx in burner applications: those that prevent the formation of nitric oxide (NO) and those that destroy NO from the products of combustion. The methods that prevent the formation of NO involved modifications to the conventional burner designs or operating condition. In this research, the burner will be designed to incorporate swirling flow to enhance turbulence and hence helps in mixing of fuel and air prior to ignition. Swirling flow induces a highly turbulent recirculation zone, which stabilises the flame resulting in better mixing and combustion (Gupta *et al*., 1998). It has been suggested that the large torroidal recirculation zone plays a major role in the flame stabilisation process by acting as a store for heat and chemically active species and, since it constitutes a well-mixed region, it serves to transport heat and mass to the fresh combustible mixture of air and fuel (Judd *et al*., 2000).

Beer and Chigier promoted the methods of inducing rotation in a stream of fluid and they can be divided into three principal categories:

- Tangential entry of the fluid stream, or of a part of it, into a cylindrical duct.
- The used of a guide vane in axial tube flow.
- Rotational of mechanical devices that impart swirling motion to the fluid passing through them. This includes rotating vanes or grids and rotating tubes.

They concluded that method (a) and (b) are generally used in practice but method (c) is sometimes applied for experimental investigation of swirling flow. Most conventional liquid fuel burners employ the axial-flow type swirler. These swirl vanes are usually flat for easy manufacturing process, but curved blade may give better performance in aerodynamic properties (Iannetti *et al*., 2001).

Swirling flow is a main flow produced by air swirled in gas turbine engine. Such flow is the combination of swirling and vortex breakdown. Swirling flow is widely used to stabilize the flame in combustion chamber. Its aerodynamic characteristics obtained through the merging of the swirl movement and free vortex phenomenon that collide in jet and turbulent flow. This swirl turbulent system could be divided into three groups and they are jet swirl turbulent with low swirl, high jet swirl with internal recirculation and jet turbulence in circulation zone. Each and every case exists due to the difference in density between jet flowing into the combustion chamber and jet flowing out into the atmosphere from the combustion chamber.

When air is tangentially introduced into the combustion chamber, it is forced to change its path, which contributes to the formation of swirling flow. The balance in force could be demonstrated by the movement of static pressure in the combustion chamber and can be calculated by measuring the distribution of the tangential velocity. Low pressure in the core center of the swirling flow is still retrieving the jet flow in the combustion chamber and thus, produces the not-so-good slope of axial pressure. Meanwhile at the optimum swirl angle, the swirl finds its own direction and as a result, swirl vortex is formed.

The recirculation region in free swirl flow is shown in Figure 1. Due to assumption that the flow is axially symmetrical, thus only half of the flow characteristics are discussed. The recirculation region is in the OACB curve. The point B is known as stagnation point. The flow outside of the OACB curve is the main flow, which drives the recirculation along the AB solid curve. The ultimate shear stress could happen at points near to point A, along the boundary of recirculation. The condition of zero axial velocity is represented by hidden curve AB. Every velocity component decreases in the direction of the tip. After the stagnation point, the reverse axial velocity will disappear far into tip; the peak of velocity profile will change towards the middle line as an effect of swirling decrease.

As the level of applied swirl increase, the velocity of the flow along the centerline decreases, until a level of swirl is reached at which the flow becomes stationary. As the swirl is increased further, a small bubble of internal recirculating fluid is formed. This, the vortex breakdown phenomenon, heralds the formation of large-scale recirculation zone that helps in stabilizing the flame. It has been suggested (Beer and Chigier, 1972) that the large torroidal recirculation zone plays a major role in the flame stabilization process by acting as a store for heat and chemically active species and, since it constitutes a well-mixed region; it serves to transport heat and mass to the fresh combustible mixture of air and fuel.

In high velocity combustion system, the fuel and air mixing requires high turbulence levels and these result from the combustor pressure loss (Escott, 1993). Whether this pressure loss is generated by a jet flow system or swirl system, the air inlet aerodynamics generate shear layer which create the turbulence. In a conventional swirl burner the turbulence energy is mostly generated close to the central toroidal recirculation zone and is not fully utilised in an efficient way. In order to achieve enhanced flame stabilisation and better control of mixing process, a swirler shroud consisting of an orifice plate at the outlet of swirler throat was introduced. The aim of this was to create the main pressure loss at the outlet phase rather than in the vane passage so that the swirler outlet shear layer turbulence was maximised to assist with fuel and air mixing. Orifice plate insertion also helps to prevent fuel from entraining into the corner recirculation zone that will create local rich zone thus generates lower NOx emission by eliminating locally rich region (Kim, 1995). Locally rich region tends to generate locally high NOx emission that contributes to overall high NOx emission. Smaller orifice plate's outlet does increase the velocity of the air and fuel at the swirler shroud thus reduce the risk of flashback. However, this velocity should not be to high as lift off could occur and cause blow off of combustion. The increase in velocity also would increase the Reynolds number, which increases the strength of turbulence effect and thus reduces the combustions residence time. Other than that, from the aerodynamic factor, air and fuel mixing rate increases as the pressure drop in the swirler outlet increases.

Syred and Beer showed that for tangential entry including radial vanes, the swirling flow may produce high efficiency for isothermal performance and low loss of pressure coefficient compared to that when using axial straight and profiled vane.

Al-Kabie, on the other hand, found a significant improvement in performance as well as NOx emissions when using radial swirler compared to the axial swirler due to the immediate contact of fuel with turbulent by swirled air as it leaves the fuel nozzle. Aerodynamic curved vanes allow the incoming axial flow force to turn gradually. This inhibits flow separation on the suction side of the vane. This mean that more complete turning and higher swirl and radial velocity component can be generated at the swirler mouth, with the added advantage of lower pressure loss.

Al-Kabie also investigated the discharge coefficient (CD) for the various radial swirlers. He showed that, by using the radial swirler, the discharge coefficients were low, approximately 0.6 compared with the zero angle blade, approximately 0.9. Poor CD is due to the vane angle and not just the 90º inlet and outlet blades. This led to a major consideration of the flow field inside the swirler vane passage as low CD implied that flow separation occurred in the passage in spite of the curved vane.

1.1 Swirl number

The swirl number is usually defined as the fluxes of angular and linear momentum (Beer and Chigier, 1972) and it is used for characterising the intensity of swirl in enclose and fully separated flows.

The parameter can be given as (Beer and Chigier, 1972)

$$S' = \frac{G_\phi}{G_\chi . r_o} \tag{1}$$

where G_ϕ is the axial flux of angular momentum:

$$G_\phi = 2\pi \int_0^\infty \rho U_x U_\theta r^2 dr \tag{2}$$

and G_x is the axial flux of momentum (axial thrust):

$$G_\chi = 2\pi \int_0^\infty \rho U_x^2 r dr + 2\pi \int_0^\infty p r dr \tag{3}$$

In the above, r_o is the outer radius of the swirler and U_x and U_θ are the axial and tangential component of velocity at radius r.

Since the pressure term in Equation (3) is difficult to calculate due to the fact that pressure varies with position in the swirling jet, the above definition for swirl number can be simplified by omitting this pressure term. Swirl number can be redefined as:

$$S = \frac{G_\theta}{G_x^{'} r_o} \tag{4}$$

where

$$G_x^{'} = 2\pi \int_0^\infty \rho U_x r dr \tag{5}$$

The swirl number should, if possible, be determined from measured values of velocity and static pressure profiles. However, this is frequently not possible due to the lack of detailed experimental results. Therefore, it has been shown (Beer and Chigier, 1972) that the swirl number may be satisfactorily calculated from geometry of most swirl generator.

2. Experimental set up

The drawing for radial air swirler is shown in Figure 2. Table 1 shows the various dimensions of radial air swirler used in the present work. The air swirlers are made from mild steel. They were manufactured in various angles to investigate the effect of pressure loss and combustion performance due to swirl number on the overall performance of the air swirler.

The general set-up for liquid bio-fuel burner tests is shown in Figure 3. The rig was placed horizontally on a movable trolley. The air is introduced into the liquid bio-fuel burner and flows axially before entering radial through the air swirler of 8 blades where the amount of air entering the combustor is controlled by the flame swirler minimum area. The rig is equipped with a central fuel injector. The inside diameter of the combustor is 280 mm and the length is 1000 mm. The combustor was cooled by convection from the ambient air. Industrial ring blower was used for air supply at below 0.5% pressure loss.

3. Results and discussions

3.1 Isothermal performance

In order to achieve better mixing between fuel and air in liquid bio-fuel burner, turbulence flow must be generated to promote mixing. Turbulence energy is created from the pressure energy dissipated downstream of the flame stabilizer. In the radial swirler with orifice insertion, turbulence can be generated by increasing the aerodynamic blockage or by increasing the pressure drop across the swirler.

The discharge coefficient for radial swirler were obtained by passing a metered air flow through the radial swirler and flame tube while monitoring the static pressure loss upstream of the radial swirler relative to the atmospheric pressure. The results for isothermal performance were plotted as a function of Reynolds number and presented in Figure 4.

From Figure 3, it can be seen generally that all discharge coefficients were approximately constant with variation in Reynolds number. Thus the value of discharge coefficient may be concluded to be independent of Reynolds number. In the case for S = 1.911or 70º vane angle swirler gave the highest CD around 0.68. The CD values were decreased with the decreasing in swirl number (S), with the lowest S = 0.780 having the CD value of around 0.58. This may be attributed to the fact that the excessive swirl was generated by the restriction on swirler exit width.

3.2 Combustion Performance

Figures 5 and 6 show the effect of increasing the swirl number on exhaust emissions from burner system. Tests on exhaust emission were carried out using four swirler vane angles of 45°, 50°, 60° and 70°.

Figure 5 shows vast reduction in oxides of nitrogen (NOx) emissions when the vane angle was increased from 45° to 70°. This was apparent for the whole range of operating equivalence ratios. Emissions level of below 35 ppm was obtained for all range of operating equivalent ratios. For swirl number of 1.911, NOx emissions reduction of about 12 percent was obtained at equivalence ratio of 0.83 compared to the swirl number of 0.780 at the same equivalence ratio. This proved that swirl does helps in mixing the bio-fuel and air prior to ignition and hence reduced NOx emissions. This situation occurs at certain swirler vane angle. However this was achieved at the expanse of increased in other emissions and reduction in combustion stability.

Figure 6 shows carbon monoxide emissions versus equivalence ratio for all swirl number. There was a 13 percent, 22 percent and 31 percent reduction in carbon monoxide (CO) emission for swirl number 0.978, 1.427 and 1.911 compared to swirl number of 0.780 at the equivalence ratio of 0.833. The concentration of carbon monoxide emission increases with increase in equivalence ratio. This was anticipated due to the fact that any measure of decreasing NOx will tend to increase CO since both emissions were on the different side of the balance (Al-Kabie, 1989). Nonetheless, the increase was quite high, which indicates that there is some fuel escaped unburned, which was the product of incomplete combustion.

4. Conclusion

An experimental investigation of swirl number effect on the NO_x and CO emissions of palm oil combustion has been conducted. Four radial swirlers with vane angles of 45°, 50°, 60°and 70° which are corresponding to 0.780, 0.978, 1.427 and 1.911 respectively was used in this investigation.

NOx emissions reduction of about 12 percent was obtained at equivalent ratio of 0.83 at swirl number of 1.911 as compared to 0.780 at the same equivalence ratio. Other emissions such as carbon monoxide decreased when using higher swirl number compared to that of the lower swirl number. This shows that the proper design of the swirler enhances the mixing process of the air and bio-fuel prior to ignition.

It can be also concluded that NOx emissions of less than 35 ppm were achievable over the whole range of equivalence ratios for all swirlers.

Acknowledgement

The authors would like to thank to Ministry of Science, Technology and Innovation (MOSTI) for supporting this research under Science Fund Grant Schemes (SF 9005- 00031) and (03-01-06-SF0043) as well as to School of Manufacturing Engineering, Universiti Malaysia Perlis and UTM for providing research facilities to undertake this work.

References

Al-Kabie, H.S., (1989). ‘Radial Swirler for Low Emissions Gas Turbine Combustion’, PhD. Thesis, Univ. of Leeds.

Beer, J.M. and N.A. Chigier, (1972). Combustion Aerodynamics. Applied Science Publishers Ltd.

Craig T. Bowman, (1975). ’Kinetics of Pollution Formation and Destruction in Combustion.’, Prog. Energy Combust. Sci. Vol. 1, pp 33-45, Pergamon Press.

Escott, N.H., (1993). “Ultra Low NOx Gas Turbine Combustion Chamber Design”, University of Leeds, Department of Fuel and Energy, PhD.

Gupta, A.K., Lewis, M.J., and Qi, S., (1998). “Effect of Swirl on Combustion Characteristics of Premixed Flames,” J. Eng. Gas Turbine and Power, Trans, ASME, 120, July, 488-494.

Iannetti, A., Tacina, R., Cai, J., and Jeng, S.-M., (2001). “Multi-Swirler Aerodynamics: CFD Predictions”, AIAA 2001-3575, 37th AIAA/ASME/SAE/ASEE Joint Propulsion Conference and Exhibit, Salt Palace, Salt Lake City, UT, USA, July 8-11, 2001.

Judd, K.P., Rusak, Z., and Hirsa, A., (2000). "Theoretical and Experimental Studies of Swirling Flows in Diverging Streamtubes," in: Advances in Fluid Mechanics III, edited by M. Rahman and C.A. Brebbia, WIT Press, 491-502.

Khezzar L., (1998). 'Velocity Measurement in the Near Field of a Radial Swirler.' Experimental Thermal and Fluid Science, Vol 16, pp 230-236, Elsevier Science Inc.

Kim, M.N., (1995). Design of Low NOx Gas Turbine Combustion Chamber. University Of Leeds, Dept. of Fuel & Energy, PhD.

Syred, N. and M. Beer, (1974). 'Combustion in Swirling Flow: A Review', Combustion and Flame. 23:143-201.

Table 1. Dimensions of Various Radial Air Swirler

Swirler angle / Parameter	45º	50º	60º	70º
Passage width, h (mm)	12	11.2	9.6	8.8
Swirl number, S'	0.780	0.978	1.427	1.911
No. of vane, n	8			
Outlet diameter, do (mm)	98			
Inlet diameter, di (mm)	50			
Vane depth, L (mm)	25			

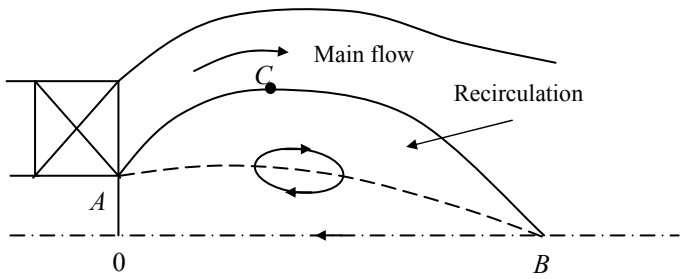

Figure 1. Recirculation zone in swirling flow

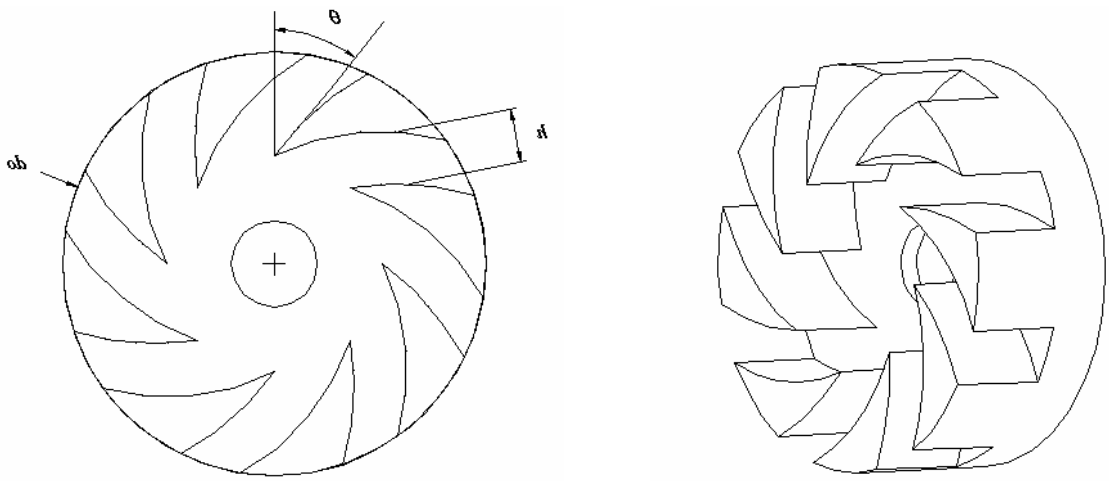

Figure 2. Schematic of Radial Air Swirler Design

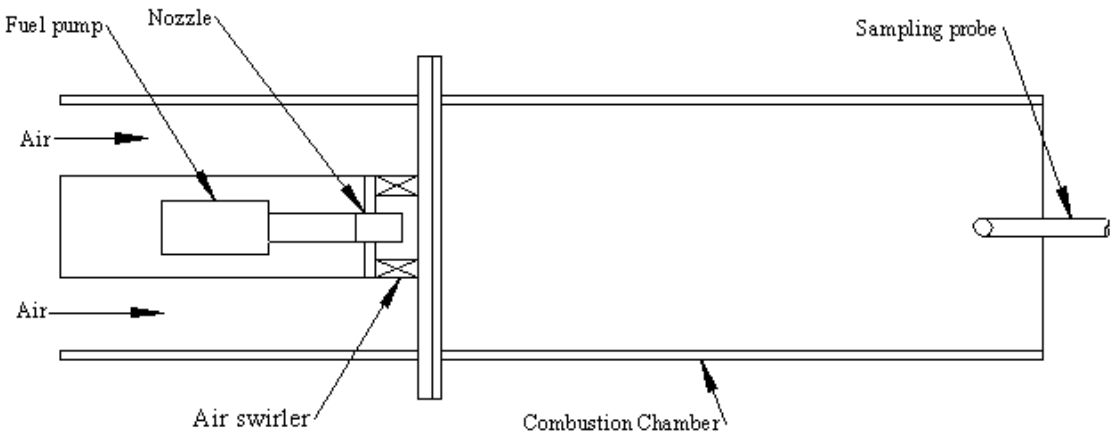

Figure 3. Schematic Diagram of the liquid bio-fuel burner experimental rig

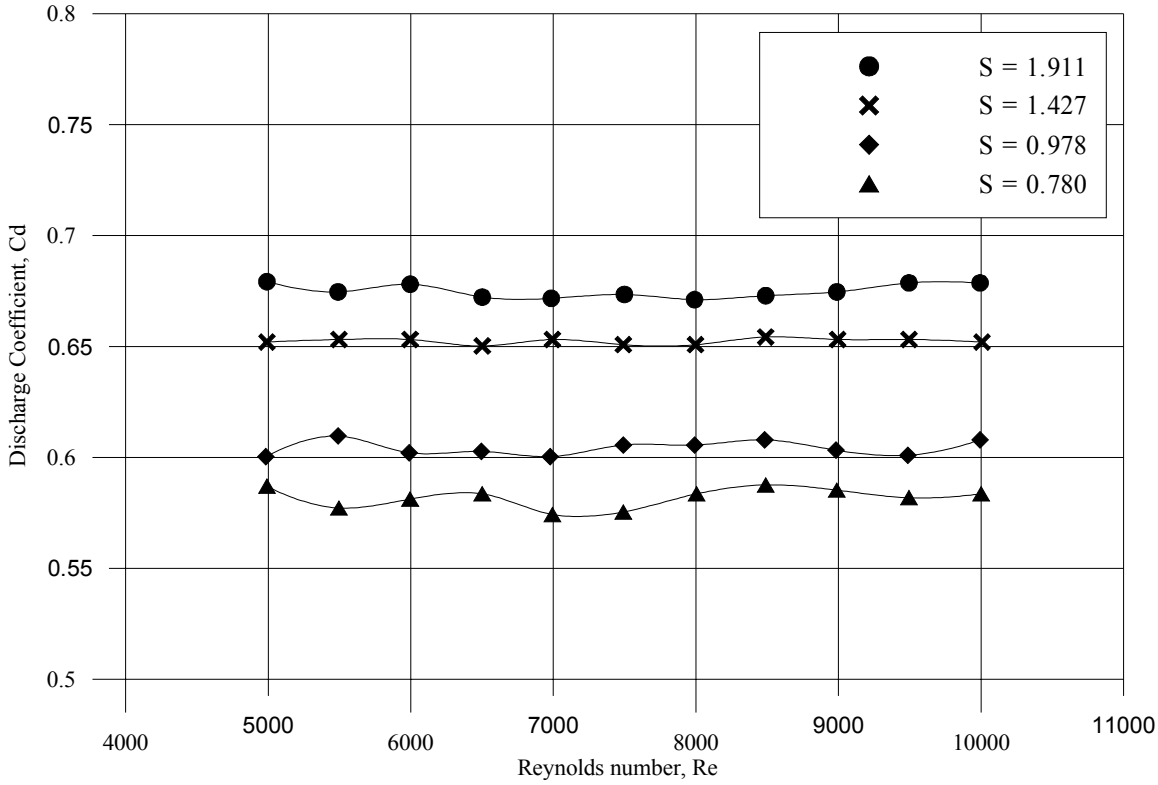

Figure 4. Discharge Coefficient vs. Reynolds Number for Various Swirl Numbers

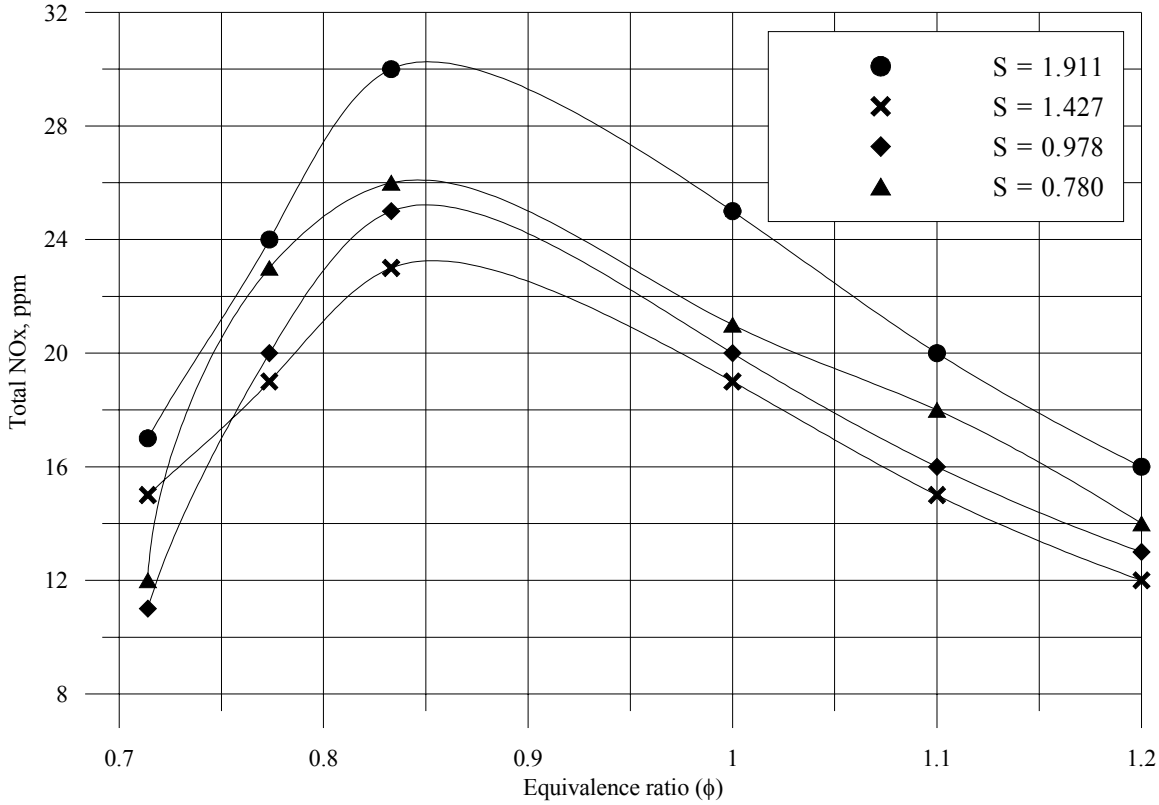

Figure 5. NO_X vs Equivalence Ratio for various swirl Number

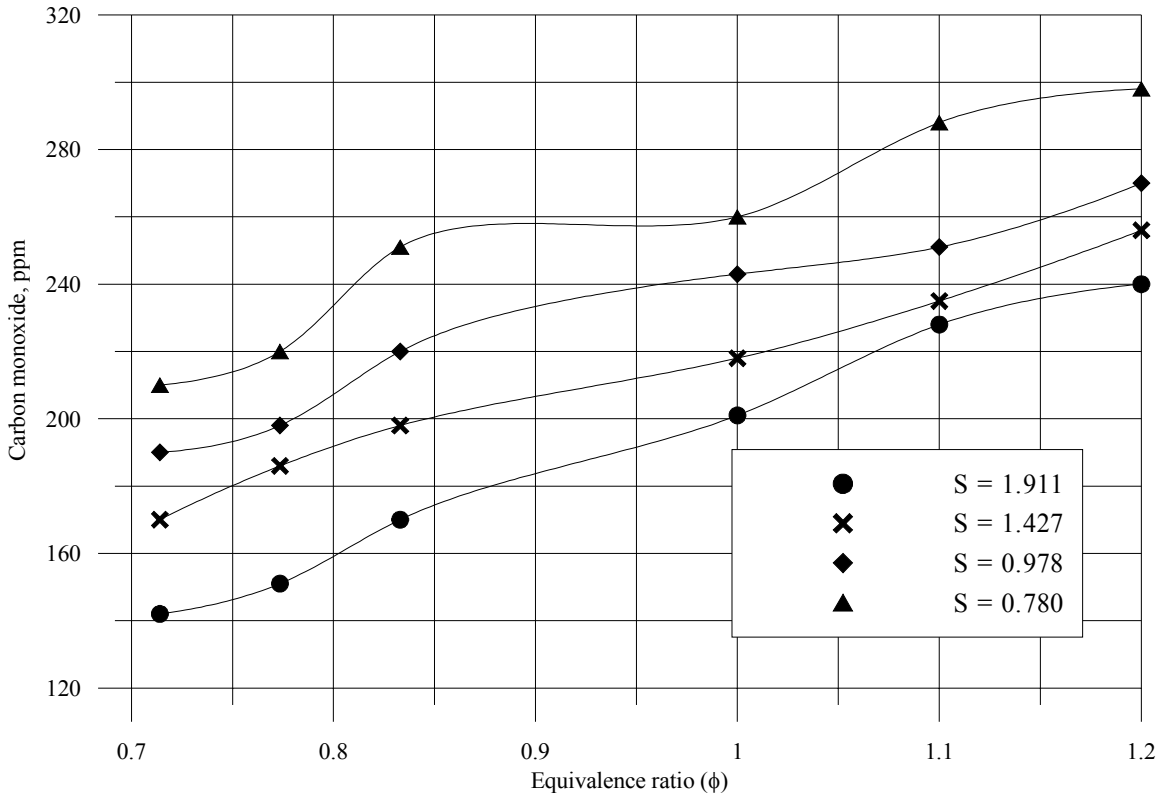

Figure 6. CO vs. Equivalence Ratio for various swirl number