Design of Intelligent Car

Lijuan Cai
Changchun University of Sciences and Technology, Changchun 130022, China
E-mail: juanlicai@yahoo.com.cn

Lijing Cai
Heilongjiang bayi Agricultural University, Daqing 163319, China

Weida Zhan
Changchun University of Sciences and Technology, Changchun 130022, China

Received: July 1, 2011 Accepted: August 20, 2011 Published: December 1, 2011
doi:10.5539/mas.v5n6p245 URL: http://dx.doi.org/10.5539/mas.v5n6p245

Abstract

In this design, various photoelectric sensors are used to detect the environment around the car, and translate the light signals into electric signals. Through respective designs and integration, the movement position, the velocity, the movement direction, and the movement time of the car could be controlled. At the same time, the Hall velocity sensor and the counter are used to realize the measurement and display of the movement distance and the display of time.

Keywords: Intelligent, Automatic, Detection

1. Project definition

The principal design task is to accomplish the drive of the car on the regulated travel line. According to different travel parts, the system will use the infrared detection to control the car to turn the direction automatically and drive on the travel curve, process and display relative data in the travel. In the design, the car could display the time and the travel mileage, and send out acousto-optic alarm at the regulated positions. The project definition of the system implement is described as follows.

1.1 Infrared photoelectric detection system

The photoelectric detection system is composed by three parts.

(1) Detecting the baffle. The detecting distance is in 0.5 m, and when the baffles could be detected at both sides, the car will move ahead. And when the baffle at any one side could not be detected, the car will turn the direction automatically.

(2) Detecting the black track. When the infrared photoelectric signals are detected at the left side, the car turns left, and when the infrared photoelectric signals are detected at the right side, the car turns right.

(3) Detecting the incandescence light. When the car detects the light, the car could move ahead along the light to the stop line.

1.2 Steering control system

(1) Turn right. When the baffle has not been detected at the right side, or the baffles have not been detected at both sides, the right turning control system begins start and controls the car to turn right.

(2) Turn left. When the baffle has not been detected at the left side, the left turning control system begins start and controls the car to turn left.

1.3 Design of the steering drive amplifier, the advancing drive amplifier and the receding drive amplifier

The amplifier circuit is composed by the double-pliotrons to unify the drive and the amplifier, with simple and practical characteristics, for better control the motor.

1.4 Design of stopping

When the car detects the incandescence light, it will move ahead to the light, and when the photoelectric sensor under the car detects the stop line, which indicates that the car have arrived the stop line, and the light-spot sensor stops working, and the stop drive circuit works to stop the car.

1.5 Brief summary

Through careful demonstration and research, the final project is seen in Figure 1.

2. Design of principal circuit

In the test, the track is white, and with baffles at both sides, the car moves ahead, and without baffles, the car needs turn the direction, and because of the limitation of the baffle distance, the infrared detection sensor could detect the obstacles in 0.5 m at both sides. In the regulated area, the car should move along the black tracks, but because the track is white, the bottom is equipped by the infrared photoelectric detection sensor with different reactions to the light. When the car enters into the special area, it should move along the incandescence light, so the infrared photoelectric sensor which is sensitive to the incandescence light is equipped at the front end of the car. The infrared photoelectric sensor converts the light signals into the electric signals, and inputs them to its respective drive circuits and controls the motor. To realize the automatic steering of the car, the car should move along the regulated track. In the movement, the car needs display the time and the distance, and the time display is implemented by that the clock circuit transfers the pulse signals with the period of 1s, and the distance display is implemented by that the Hall sensor accumulates the hub rev of the car. When the car arrives at the fixed point, it needs stop for 5 s, and the acousto-optic alarm works, and the timing is implemented depending on the mono-sTable timing circuit composed by the 555 generators, and the acousto-optic alarm is implemented by the acousto-optic alarm circuit composed by the luminous diode and the buzzer.

2.1 Advancing drive circuit

At both sides of the car, the infrared photoelectric detection sensor could detect the obstacles in 0.5 m, and the signal output of the right-side photoelectric detector is A1, and the signal output of the left-side photoelectric detector is A2, and when both A1 and A2 are 0, the car moves ahead, and the concrete circuit is seen in Figure 2.

2.2 Steering circuit

When the car moves to certain distance, it needs steering according to the requirement, and the first steering is at the time when there is not baffle at the left side, and the second steering is at the time when there are not baffles at both sides, and the third steering is at the time when there is not baffle at the left side. When the photoelectric sensor at the side detects the baffle, the electric signal is at the lower level, and when the photoelectric sensor at the side has not detected the baffle, the electric signal is at the higher level. Based on that, the turn-right control circuit of the car and the turn-left control circuit of the car are designed.

The signal output of the right-side photoelectric detector is A1, and the signal output of the left-side photoelectric detector is A2, and the concrete detection circuit is seen in Figure 3. When both A1 and A2 are 0, the car moves ahead, and when A1 is 1 and A2 is 0, or both A1 and A2 are 1, the car turns right, and when A1 is 0 and A2 is 1, the car turns the direction, and the turn-right circuit is seen in Figure 4, and the turn-left circuit is seen in Figure 5.

2.3 Steering drive amplifier circuit

When the steering signal is selected, the signals enter into the steering drive circuit, and the concrete circuit is seen in Figure 6, and the amplifier circuit is used to amplify the power to drive the motor (seen in Figure 7).

2.4 Advancing and receding drive amplifier circuit

When the car moves ahead or back, it needs the amplifier circuit to amplify the power and drive the motor. The pliotron is used to compose the amplifier circuit, and the concrete circuit is seen in Figure 8.

2.5 Acousto-optic alarm circuit and timing circuit

When the car arrives at the point of D, it needs stopping for 5 s, and the acousto-optic alarm works. The acousto-optic alarm circuit is composed by the luminous diode, the buzzer, and the NAND gate, and the concrete circuit is seen in Figure 9, and the timing circuit is implemented by the mono-sTable timing circuit composed by 555 generators, and the concrete circuit is seen in Figure 10.

2.6 Clock circuit

In the travel, the car needs display the time, and the time display is implemented by that the clock circuit

transfers the pulse signals with the cycle of 1 s to the accumulated counter, i.e. the 555 generator produces a pulse with the cycle of 0.25 s, through frequency division twice. The concrete circuit is seen in Figure 11.

2.7 Car track detection circuit

When the car enters into some regulated areas, the car needs move along the black track, and the photoelectric detection sensor needs detect the black track, and when the left-side sensor detects the infrared photoelectric signals, the car will turn left, and when the right-side sensor detects the infrared photoelectric signals, the car will turn right, and in this way, the car will move ahead along the black track, and the concrete detection circuit is seen in Figure 12.

2.8 Incandescence light detection circuit

When the car enters into some regulated areas, the car needs move along the direction of the incandescence light, and the photoelectric detection sensor which is sensitive to the incandescence light needs detect the incandescence light, and when the left-side sensor detects the infrared photoelectric signals, the car will turn left, and when the right-side sensor detects the infrared photoelectric signals, the car will turn right, and in this way, the car will move ahead along the incandescence light until to the stop line, and the concrete detection circuit is seen in Figure 12.

2.9 Stop circuit

When the car detects the incandescence light, it will move ahead along the light, but when the photoelectric sensor under the car detects the stop line, it indicates that the car arrives at the stop line, and here the light-spot sensor doesn't work, and the stop drive circuit works to stop the car. The stop circuit is seen in Figure 14.

3. Design and implementation of other functions

3.1 Nixie tube display

To realize the distance supervision real time, two nixie tubes are used in the design. One display the distance (linking with the Hall switch, and displaying the cycles of the hub, and the travel distance could be obtained after multiplying the perimeter of the hub, 10.7 cm), and the other links with the clock and displays the time accomplishing the project. This design could also enhance the observation in the test.

3.2 Speed-transformation

The intelligent car changed from five-level speed-change remote control car keeps the mechanical speed-change system of the original car. The back-shaft of the car is not an iron axis like common electro-cars, and it includes two semi-axes made by hard-wearing rigid plastics, and uses a group of gears with interior and exterior occlusions to form the similar speed-change system like the speed-change system of the gear box of the real car. The speed-change system has following advantages. First, when steering, two wheels could rotate out of sync, which could reduce the friction of the tires to the earth and increase the steering speed. Second, when starting initially, the phenomena that too quick rev of the motor and the maximum velocity in instant time will burn out the motor and the motor brush interferes the normal work of the circuit could be avoided.

4. Conclusions

In this design, the small and flexible remote control car is adopted for the retrofit, and because of many objective problems such as small space and strong interference of electromagnetic wave, the control circuit of the car adopts the digital logic circuits. The sensors use the products with sensitivity. Many functions such as intelligently correcting the advancing track, intelligent steering, the intelligent receding, the exact positioning, the intelligent stop, and the wheel-slip prevention are realized in this design.

References

He, X. C. (2004). *Sensor and Its Application Circuit.* Beijing: Science Press.

Jin, W. Z. (2000). Preparation of the Humiture Detection Control System. *Electronics and Automation,* 6. 15-21.

Lin, F. (2005). *Modern Practical Sensor Circuit.* Beijing: Chinese Metrology Press.

Sha, Z. Y. (2002). *Principle and Application of the Intelligent Integrated Temperature Sensor.* Beijing: China Machine Press.

Wang, B. X. (2003). *Base of Measuring and Testing Techniques.* Beijing: Tsinghua University Press, pp. 50-200.

Wang, Y. J., & Cong, Y. Z. (2003). *Digital Logics and Digital System.* Beijing: Electronic Industry Press.

Wang, Y. (2004). *Analog Electronics Technique.* Beijing: Tsinghua University Press, pp. 10-150.

Zhu, X. G., et al. (2002). Temperature and Humidity Control for Agriculture-greenhouses. *Techniques of Automation and Applications.* 6, 15-21.

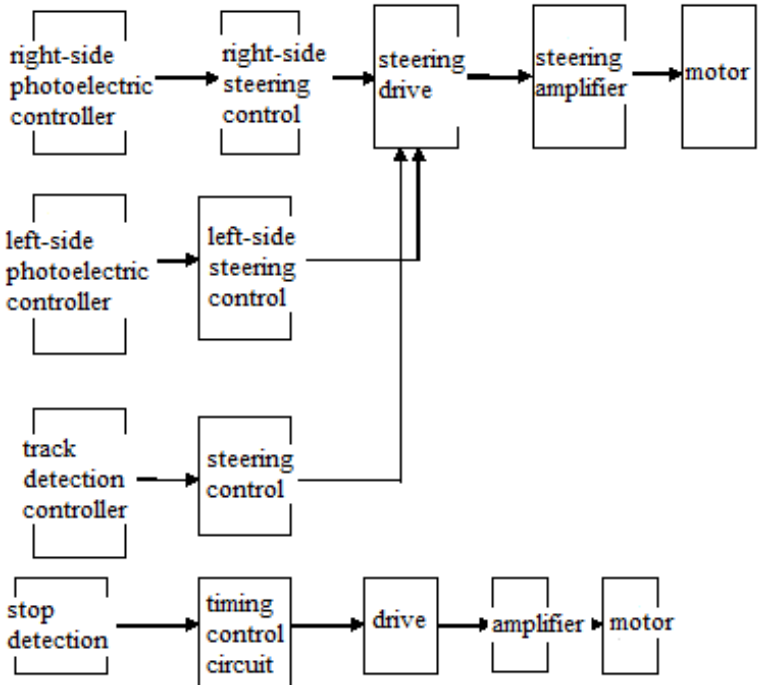

Figure 1. Functional Block Diagram

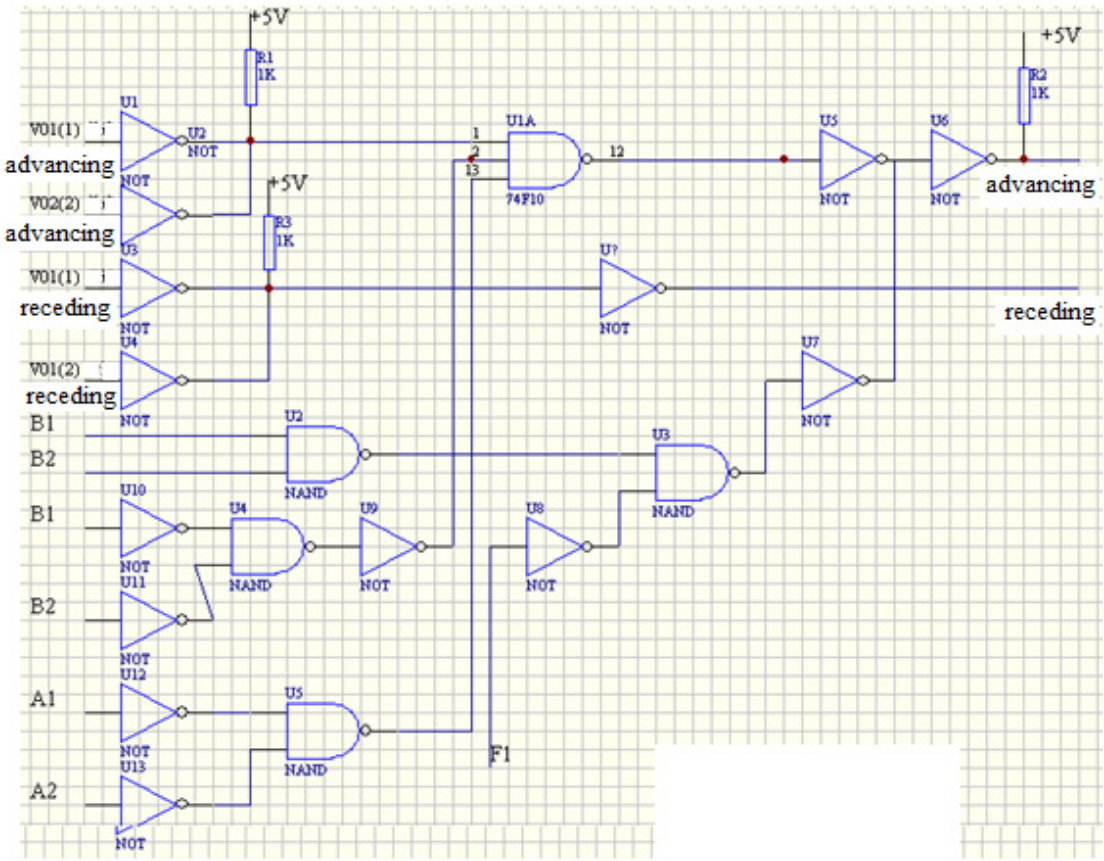

Figure 2. Car Advancing Drive Circuit

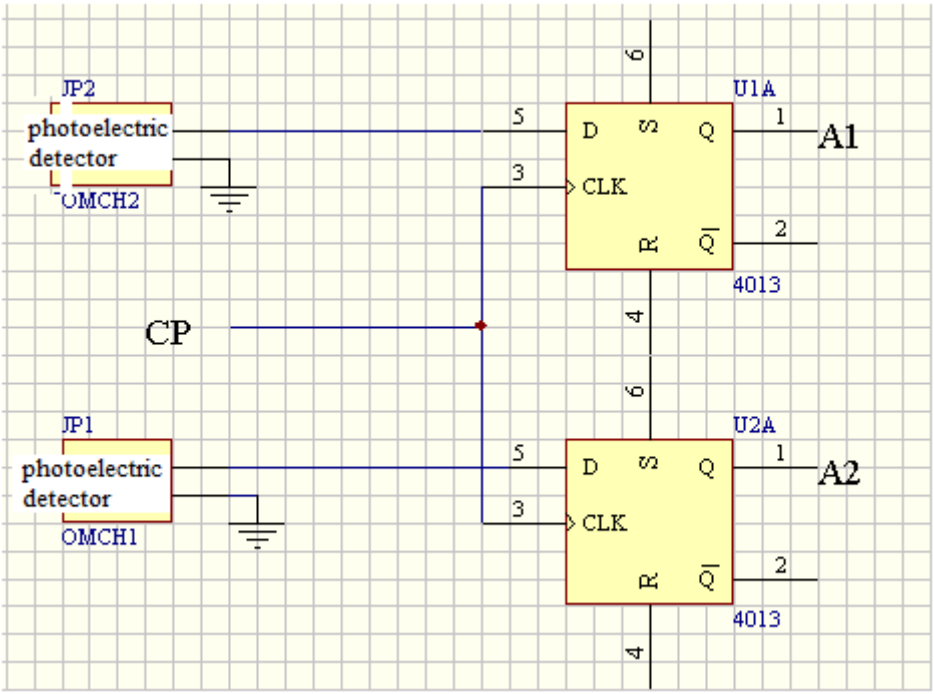

Figure 3. Photoelectric Detection Circuit

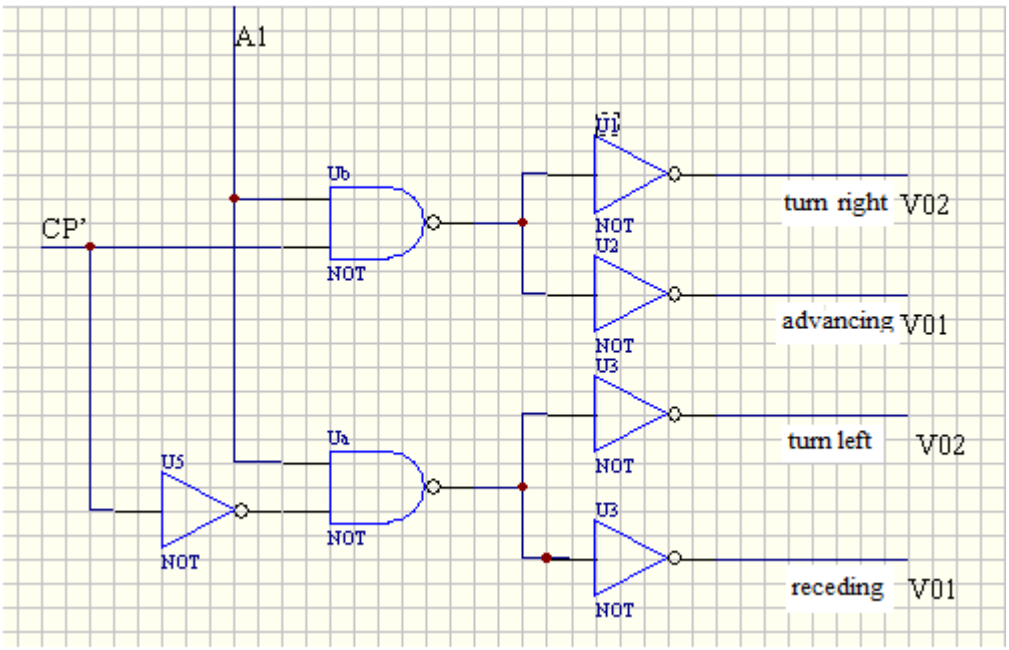

Figure 4. Turn-right Control Circuit

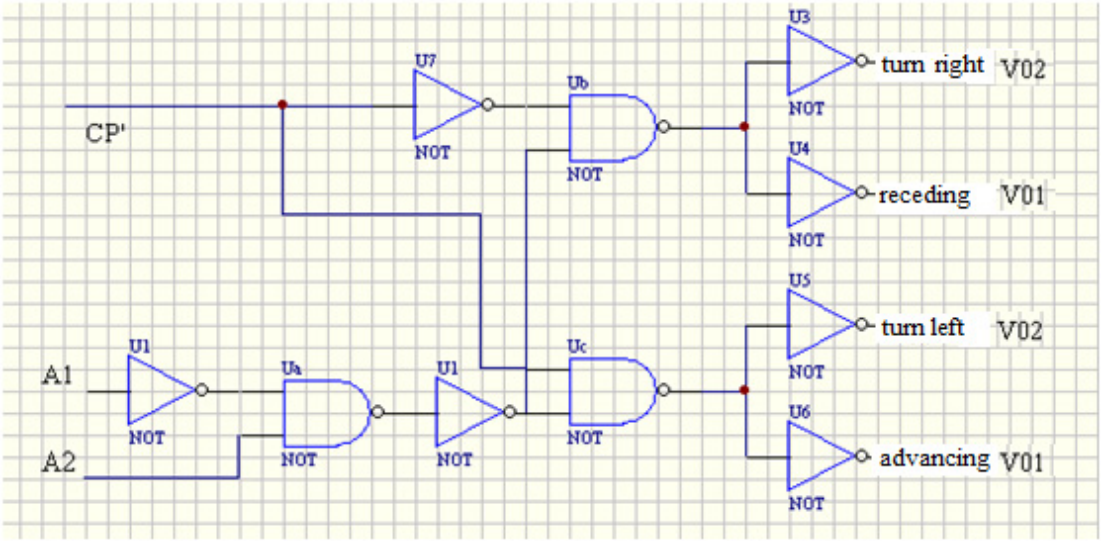

Figure 5. Turn-left Control Circuit

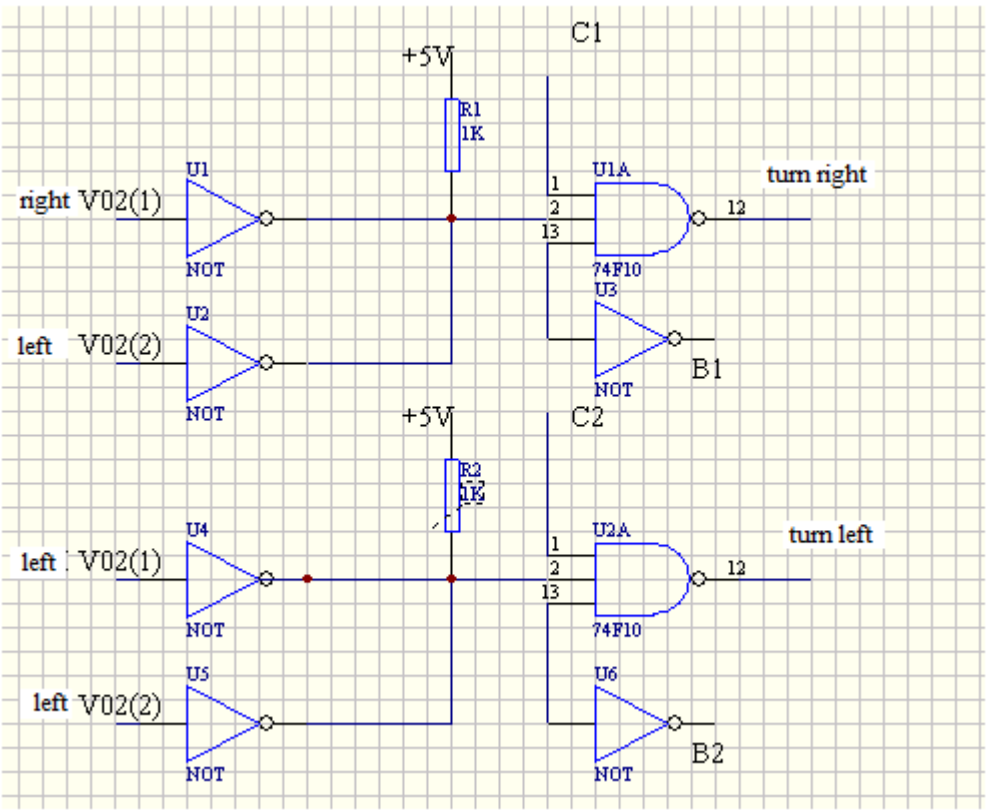

Figure 6. Steering Drive Circuit

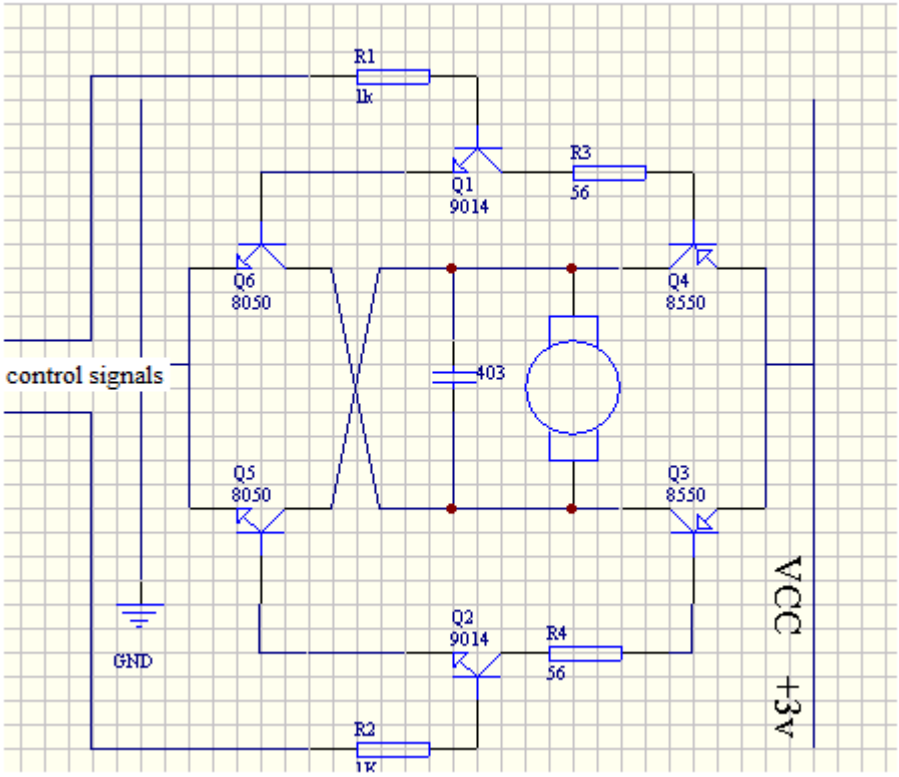

Figure 7. Car Direction Amplifier Circuit

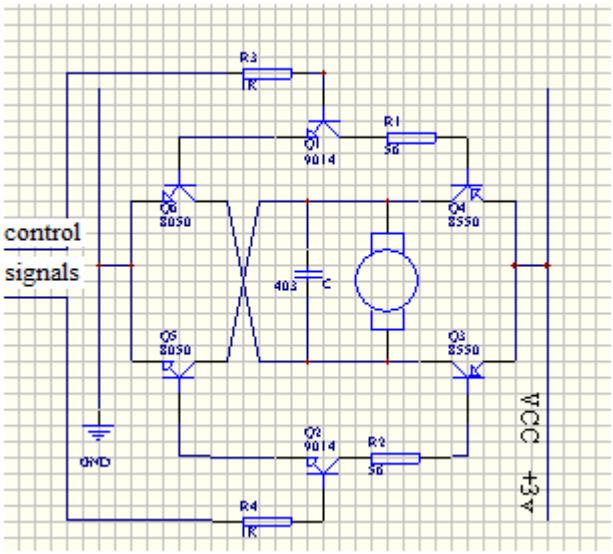

Figure 8. Car Advancing and Receding Amplifier Circuit

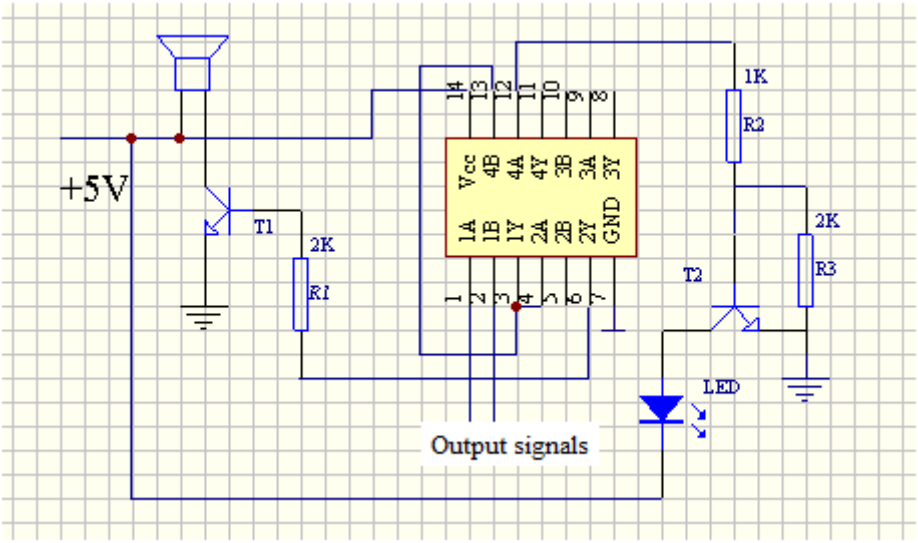

Figure 9. Acousto-optic Alarm Circuit

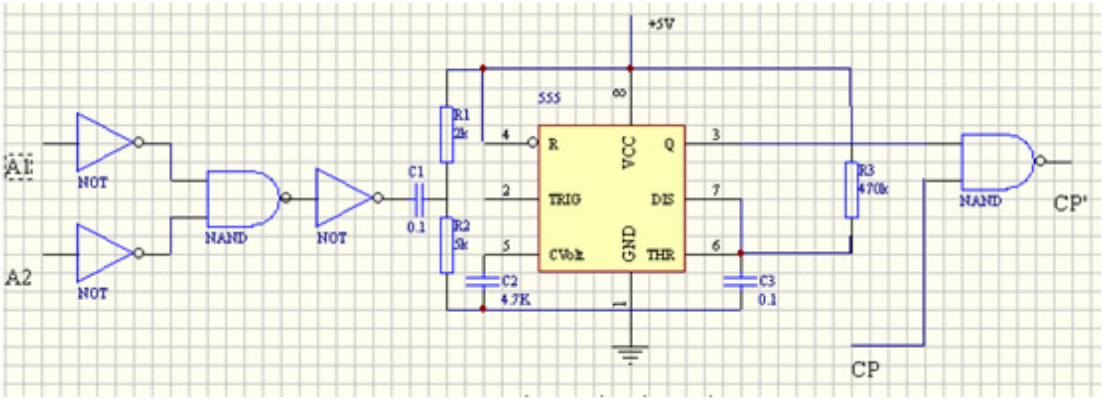

Figure 10. Timing Circuit

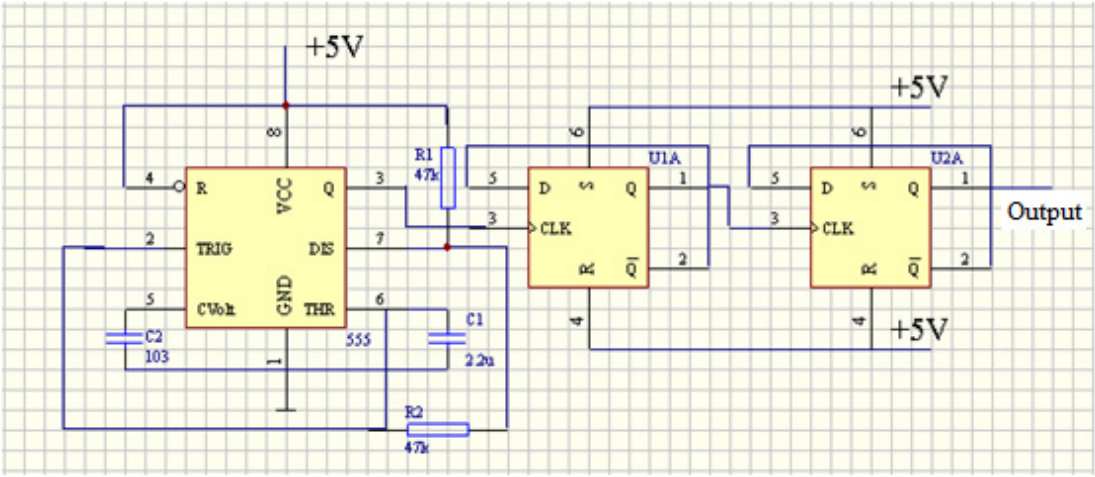

Figure 11. Clock Circuit

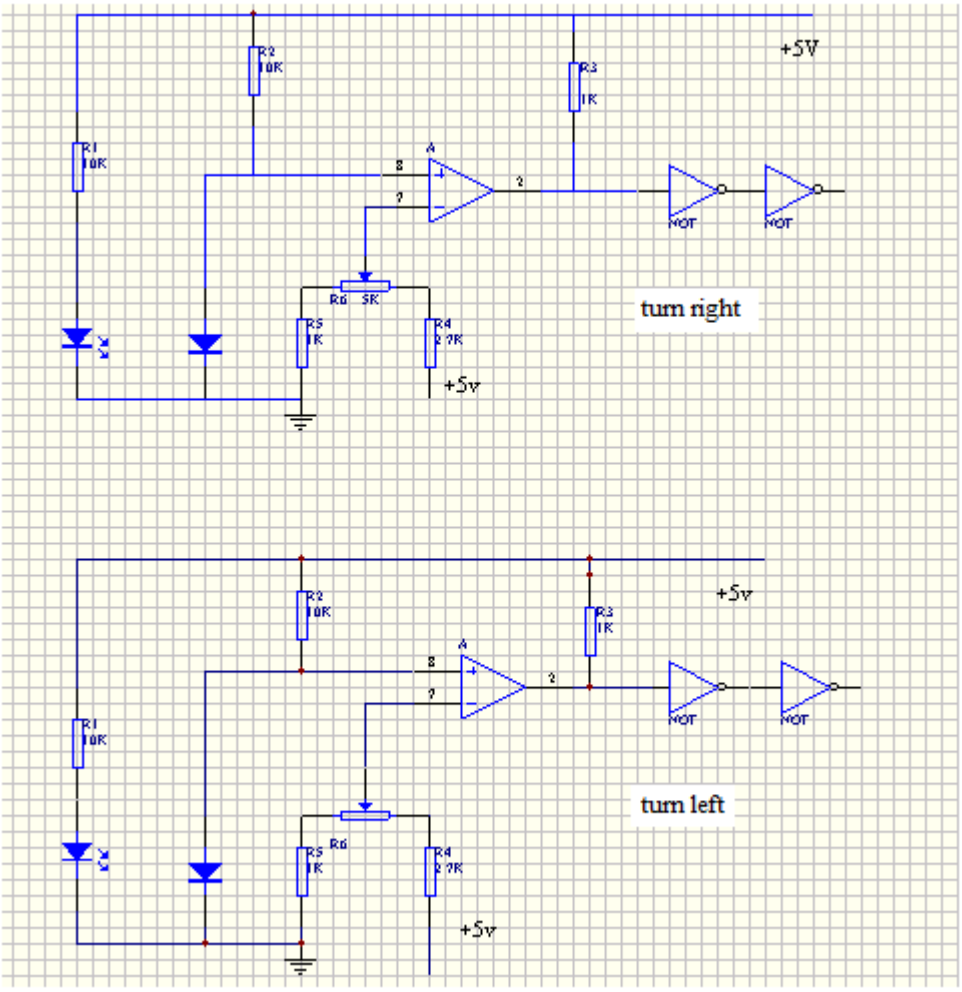

Figure 12. Car Track Detection Circuit

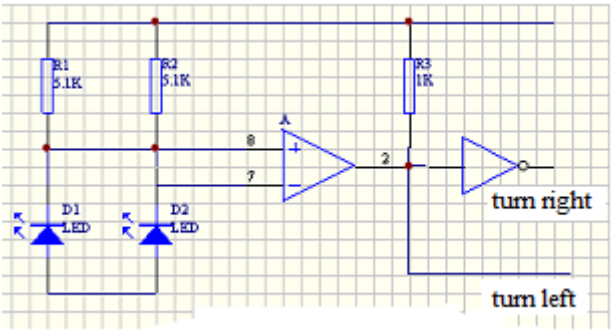

Figure 13. Incandescence Light Detection Circuit

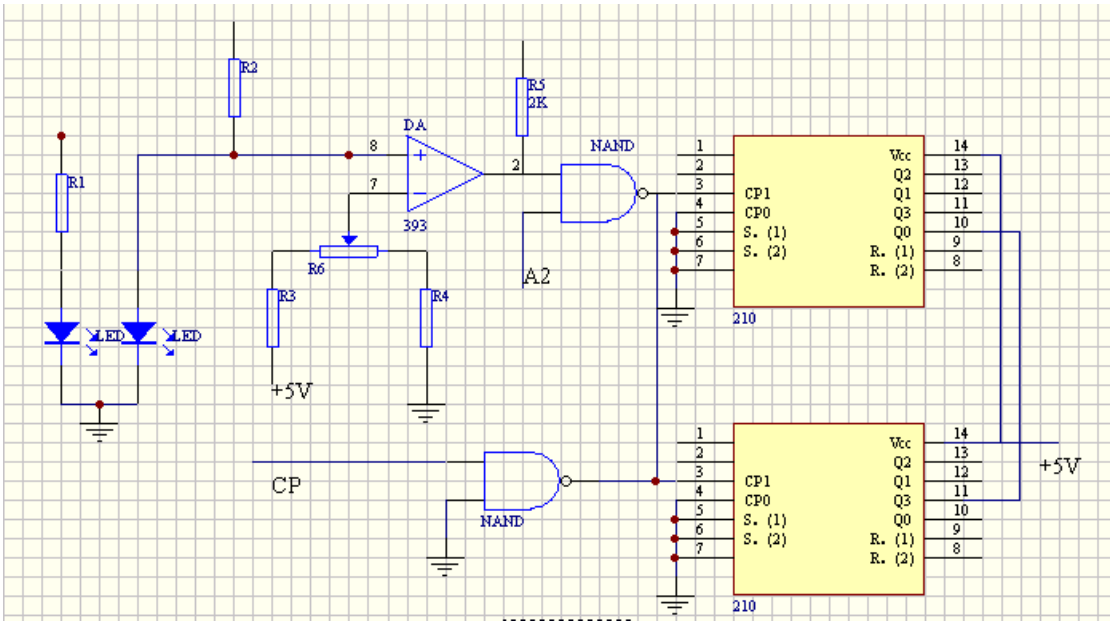

Figure 14. Stop Circuit