Asian Social Science; Vol. 9, No. 5; 2013
ISSN 1911-2017 E-ISSN 1911-2025
Published by Canadian Center of Science and Education

Verb Agreement Features in Standard Arabic (SA): A Minimalist Approach

Mostapha Thabit Mohamed[1]

[1] Department of English, Faculty of Arts, Minia University, Egypt

Correspondence: Mostapha Thabit Mohamed, Department of English, Faculty of Arts, Minia University, Egypt. E-mail: mostapha.thabit6@gmail.com

Received: February 21, 2013 Accepted: March 19, 2013 Online Published: April 27, 2013

doi:10.5539/ass.v9n5p83 URL: http://dx.doi.org/10.5539/ass.v9n5p83

Abstract

The present study investigates the features of the verb agreement in Standard Arabic (SA).The investigation is conducted within the framework of the principles of Chomsky's Minimalism. The main objective of the study is to survey the applicability of the Minimalist principles on the derivation of SV order and VO order in SA. The study shows that the principles of Minimalism cannot account for the feature of agreement asymmetry either in SV order or VS order. The study concludes that principles of Minimalism needs to be modified to justify the asymmetry in agreement features of the verb in both SV and VS orders in SA.

Keywords: agreement, minimalism, minimalist program, Arabic word-order

1. Introduction

The purpose of the present study is to discuss the feature of the verb-subject agreement in Standard Arabic (SA) within the framework of Chomsky's Minimalist Program. SA reflects two different word orders: Subject – Verb (SV) order and Verb – Subject (VS) order. In both cases, the verb shows different agreement features with its subject. In VS order, the verb agrees with its subject only in gender, whereas in SV order, the verb agrees with its subject in number, person and gender. The following study seeks to provide an account for this feature of agreement asymmetry between the verb and its subject within the framework of the minimalist program as outlined by Chomsky (1995, 1999, 2000, 2004, 2005, 2008). The main purpose is to investigate the applicability of the principles of Chomsky's program on both word orders in SA to account for the agreement in SA. The study discusses how far the principles of Minimalist program can provide an explanation for the agreement asymmetry of the two word-orders in SA.

2. Problem of the Study

There are two different word-orders in SA,: SV order and VS order. When the subject is preverbal, the verb agrees with its subject in number, gender and person. However, when the subject is postverbal, the verb agrees with it in gender only. The study discusses the problem of agreement asymmetry in these two different word-orders within the framework of Minimalism as suggested by Chomsky (1995) and developed in his subsequent works (1999, 2000, 2004, 2005, 2008). The study aims to prove whether the principles of minimalism are valid or invalid in providing a principled explanation for the feature of agreement in SA.

The investigation of the feature of agreement in this study is limited to a variety of Arabic, which is known as standard Arabic. This variety of Arabic is usually used in formal speeches, letters, writing newspapers articles and books.

The investigation conducted in this study focuses on examining the applicability of Minimalist principles on the feature of agreement asymmetry in SA. The main objective of the study is to examine the universality of these principles and how far they can provide a justifiable account for the asymmetry of agreement in the word-order in SA.

The discussion set in this study aims to provide answers for the following questions:

1) Do the Minimalist principles provide a systematic analysis for the agreement features of verb-subject in SV word order in SA?

2) Do the Minimalist principles provide a systematic analysis for the agreement features of verb-subject in VS

word order in SA?

3) Can the Minimalist principles be considered as a model that provides systematic explanations for the asymmetrical agreement in the two word orders in SA?

3. Minimalist Program

Agreement, as defined by Wickens (1980: 46) is a term used "commonly to cover the relationship between verbs, nouns … pronouns and adjectives". In earlier work in the minimalist program, agreement was seen as involving a relationship between a Specifier and a head (Chomsky, 1995; Radford, 1997a, 1997b, 2004).

The present study, as referred to, is conducted within the framework of the Minimalism Program. The basic hypothesis that underlies the Minimalism Program is that language is economically designed and that linguistic theory should reflect that economical design. Therefore, minimalist approach to syntax attempts to reduce the theory to minimal number of principles and to eliminate many of the earlier principles such as D-structure, S-structure, Move Alpha and X-bar theory. (Radford, 2004, 2008; Hornstein, et al., 2005; Lasnik, 2003; Boecks, 2006).

The main function of language is to combine both sound and meaning together, for this reason, the minimalist syntax reduces the levels of language representation to two conceptual levels. The first level is known as the "Phonetic Form"(PF) and the second level is known as “Logical Form” (LF). These two levels are termed as the “interfaces”. Accordingly, to build a structure, the first step to take is to select the lexical items which constitute the numeration of language. These lexical items carry features that fit either to syntax, phonology or semantics. On one hand, these features are either interpretable or uninterpretable. Interpretable features are those features which are relevant to the interfaces and can be interpreted by them. On the other hand, uninterpretable features are those that should be eliminated during the course of the derivation before the structure is sent to the interfaces. For example, the person and number features on nouns are interpretable; these features are relevant for the semantic interpretation of the structure, and therefore they do not need to be eliminated before Spell Out.

One basic operation in the syntactic component in the Minimalist program is the concept of Merge. Merge takes two items and merges them together, creating a set. Chomsky (2004) defines two types of Merge: External Merge and Internal Merge the External Merge is the operation where a lexical item is taken by the computational system from the Numeration and is merged to the structure. In Internal Merge, one of the merged items comes from within the structure and is merged in a new slot within the structure. In other words, an item that was merged in a previous operation is re-merged in a new different place (Chomsky, 1995). This operation of re-merge is described by Chomsky (1995) as "copying" since the re-merged item leaves a copy in its original place. However, the condition posed on this copy is to form a chain with its moved original item and is c-commanded by it.

Another basic operation in the computational system is Agree. Agree is a relationship that exists between a probe and a goal where the probe c-commands the goal (Chomsky 1995, Radford, 2004, 2009), The probe has always an unvalued feature which needs to be valued and checked by a matching valued feature. As a result, the probe selects a goal, which it c-commands, with a matching feature from within the structure. As a result of Agree operation, the features on the probe are valued and deleted, and the goal remains in situ.

In some cases, the probe has an EPP feature (Extended projection principle), which requires an element to be merged to the edge of the probe (Chomsky, 2000; Lasnik, 2003; Radford, 2004, 2009). When a given probe has a feature to be checked against a goal and, at the same time, it has EPP feature, the goal would move (or be copied) from a position where it is in the complement of the probe to its new position in the Specifier. It is that both the probe and the goal need to be active in order for them to be in a feature-checking relation (Chomsky, 1995). As a condition, the probe and the goal which it c-commands, should have some features which need to be valued or checked against each other.

As the required syntactic operations take place, the structure resulted is transferred to the interface levels. This is achieved via an operation which is termed Spell Out. In this operation, the phonological features of the structure are stripped and sent to PF, where the structure takes its physical pronunciation form. The remaining features, which are the semantic ones would be interpreted by LF. Whenever the structure is interpretable on the levels of LF and PF the derivation is said to converge. However, if the structure does not conform to the principles of one or both of the interface levels, the derivation is said to crash.

Chomsky (1995) proposes that both PF and LF are not interacted. In other words, any operation which takes place in either level does not affect the other. For example, if the structure is spelled out with an uninterpretable feature at LF, it cannot be checked at a PF operation and then send that information to LF.

Chomsky (1999, 2000) proposes that the operation of Spell Out takes place in phases.

In other words, the derivation is built at different stages and each stage, when it is complete, (it) is sent to the interfaces, (but does not wait until) the whole structure is complete. This derivation by "phase", as Chomsky called (1999, 2000) states that the derivation is subject to the Phase Impenetrability Condition (Chomsky 2000:108).

Once a phase is sent to the interfaces, the internal structure of the phase is not to be accessible to any other operation in the higher phase. Nevertheless, the head and the edge of the phase can still be accessed by the immediately higher phase. The edge of the phase is the specifier of that phase, and it constitutes an “escape hatch” where elements which need to be accessed by the higher phase are placed.

The Phase Impenetrability Condition ensures the fact that derivations are cyclic; once a phase is completed, its internal structure can no longer be accessed by syntax, ensuring that derivation only moves upwards. In other words, when a certain phrase (Phase1) is spelled out, everything in that phase, except for the head and the edge, is handed over to the interfaces and is no longer accessible (to any other syntactic operations). When the immediately higher phase (Phase 2) is spelled out, the head and edge of the lower phase (Phase 1) are sent to the interfaces together with everything in the higher phase (Phase 2) except for the head and the edge of that phase.

4. Review of Literature

SA reflects two word orders. The first word order is VS and the other is SV. In the following examples:

1- Qara?a	?al-walad-u	kitaab-an
read3sg mas	the-boy-Nom	book-Acc
2- Qara?a-t	?al-bint-u	kitaab-an
read3sg fem	the-girl-Nom	book-Acc

We can observe that in (1) and (2) there is full agreement between the verb and its subject in person, number and gender. However, in the following examples:

3- Qara?a	?al-walad-an	kitaab-an
read 3sg mas	the-boys-dual-Nom	book-Acc
4- Qara?a	?al-?awlad-u	kitaab-an
read 3sg mas	the-boys-Nom	book-Acc
5- * Qara?a -uu	l-?awlad-u	kitaab-an
read 3 pl mas	the-boys-Nom	book-Acc
6- Qara?a -t	?al-bint-an	kitaab-an
read 3sg fem	the-girls-dual-Nom	book-Acc
7- Qara?a -t	?al-banat-u	kitaab-an
read 3 sg fem	the-girls-Nom	book-Acc
8- * Qara?a -an	?al-banat-u	kitaab-an
read 3 pl fem	the-girls-Nom	book-Acc

examples (3), (4), (6), and (7) show agreement between the verb and the subject only in gender. Meanwhile, examples (5) and (8) are ungrammatical, though the verb has agreement in person, number and gender (full agreement) with its subject. These examples show that full agreement is not possible in VS word order.

However, in the following examples, agreement in number, person and gender in SV is complete as shown below:

9- ?al-?awlad-u	Qara?a -uu	kitaab-an
The-boys-Nom	read 3 pl mas-Nom	book-Acc
10- ?al-banat-u	Qara?a -an	kitaab-an
The girls-Nom	read 3 pl fem	book-Acc

To summarize, SVO order shows full agreement between subject and verb in all phi-features(gender, person, and number).VS order, by contrast, shows only partial agreement, mainly in gender features. In other words, The VS order involves only gender agreement with the postverbal subject. On the other hand, the SV order reflects full

agreement of the phi features between the verb and its preverbal subject.

4.1 Previous Studies

The study of the agreement features in SA has been the main topic of many studies. These studies have endeavored to provide analyses for the agreement asymmetry in SA word order. Of these studies are Mohammed (1990, 2000), Soltan (2001, 2004, 2007), Ouhalla (1994) and Aoun, et.al, (1994).

Mohammed (1990, 2001), Soltan (2001), and Ouhalla (1994), conclude that full agreement in SV order is the result of a specifier-head relationship between the lexical subject and the tense head in the clause. The partial agreement in VS, on the other hand, is the result of the relation that exists between the tense head and a null expletive in its specifier position.

On the other hand, Aoun, et al. (1994) adopts the view that in both word orders in SA there is full agreement, but the agreement is lost in VS order which is a result of further operations such as verb raising.

However, Soltan (2007) argues that both approaches are inadequate to explain the asymmetry in subject-verb phi agreement features in (SA). Instead, he pursues the idea of positing a base-generated pro in the VP internal subject-position to explain the agreement features in both word orders in SA.

However, Soltan analysis suffers more than one problem, for instance, with regard to his pro concept which he adopts from Rizzi (1997) and the phenomenon of "Clitic Left Dislocation" constructions, as surveyed in (Holmberg, 2005, 2008; Horais, 2009). For instance, the Left Dislocation constructions is usually characterized by the presence of a lexical DP in a clause-initial position that is related to a resumptive pronoun incorporated into the verb, as can be noticed in many languages see Cinque (1977) for Italian, Escobar (1997) for Spanish, Aoun & Benmamoun (1998) for Lebanese Arabic. The same construction can observed in SA, as the following examples show:

11- a. ?al-?awlad-u ?u- hibu-hum
the-boys-Nom 1s-like-them
"The boys, I like them."
b.* ?al-?awlad-u *?u-hibu-o
the boys-Nom 1s-like
the boys I like.

12- a. ?a-Taalib-u Qaddam-tu la-hu hadiat-an
the-student-Nom gave- 1-s to him present-Acc
"The student, I gave him present."
b.* a. ?a-Taalib-u Qaddam-tu la-0 hadiat-an
the-king-Nom gave- 1s to present-Acc
"The student, I gave a present."

13- a?ahmad-un saraqa l-walad-u siarata-hu
Ahmed-Nom stole.3ms the-boy-Nom car –his
"Ahmed, the boy broke his car."
b.* ?ahmad-un saraqa l-walad-u siarata-ø
Ahmed-Nom broke.3ms the-boy-Nom car

As it can be observed in the examples above, the pronominal clitic related to the lift dislocated element can have many different syntactic functions. In (11), it is a direct object clitic. It is a complement of PP in (12) and an NP in (13). However, the deletion of this resumptive pronoun leads to ill-formed structures.

Benmamoun (2000) presents another alternative analysis. His analysis basically depends on a merger operation between the subject and the postverb where the number feature is spelled out on the verb. However, there is no such merger in the SV order.

Following the same argument, Mohammad (1990, 2000) attempts to provide an explanation for the problem of asymmetrical agreement in (SA) by proposing what he calls 'Null Expletive analysis'. The partial agreement in VS order can be justified by the relationship that exists between the node I and the null expletive that exists in its Spec.

However, the problem with this analysis is its failure to account for either the overt expletives in (SA) or the nominative case that is assigned to these expletives. To accept that an empty expletive in the Spec position of IP is coindexed with the subject in VS order leads to accept that there are two subject positions, one in the Spec of IP and the other in the Spec of VP . The empty expletive then can check its nominative case by agreement with INFL, but no explanation of how the subject in VS gets its nominative Case as positioned in VP.

Safir (1985), Chomsky (1981) and others have provided an explanation for expletives in English. They suggested that coindexing helps to transmit the nominative case of the expletive pronoun to the postverbal subject. Ouhalla (1994) draws this conclusion on Arabic suggesting that the nominative Case assigned to the null expletive by the agreement in spec IP is transferred to postverbal subject. However, Coopmans (1994) suggests that this conclusion is not practical as the preverbal expletive can be assigned accusative Case by the "?anna", as the following example shows:

14- a. jaa?a ?al-?awlad-u-u.

came.3ms the boys-Nom

"The boys came."

b. ?iddaʿa mohamed-un ?anna-hu jaa?a ?al-wlad-u.

claimed.3ms mohamed-Nom that-it came.3ms the-boy-Nom

"Mohamed claimed that the boys came.

The above examples show that there is no transmission for case. The null expletive subject is assigned an accusative case, whereas the postverbal subject ?al-walad-u is assigned a nominative case.

5. Agreement Asymmetry in SA

5.1 Subject-Verb Agreement in SA

This section shows how the phase-based model of Chomsky can explain the SV derivations in SA. Assuming the vP shell analysis (vP+VP), the following example is derived as follows:

15- ?al - ?awlad-u qara?-uu kitaab -an

The boys – Nom read 3 pl mas book– Acc

First the verb "qara?a" will enter the derivation with its agreement features unvalued while the noun "?al-?awalad-uu" enter the derivation with its phi-features (person/number/gender) valued , but its case feature is unvalued. Also, the noun "kitaab-an" enters the derivation with its case unvalued. Now, the verb 'qara?a" merges with "kitaab-an" to form the VP "qara?a kitaab-an"; the VP then merges with a light affixal verb to form the v', the v' in turn merges with the agent subject forming a vP as in the following:

16-

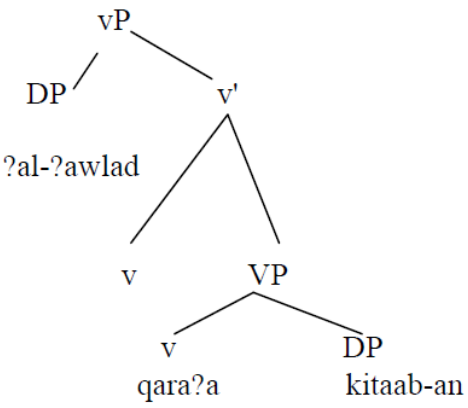

At this stage, the vP is a phase because it has a thematic external argument subject in the spec- vP. The light verb agrees with and assigns Accusative case to the DP kitaab-an. Being affixal, the light verb triggers raising of the verb kataba from its original position to it giving in the structure below:

17-

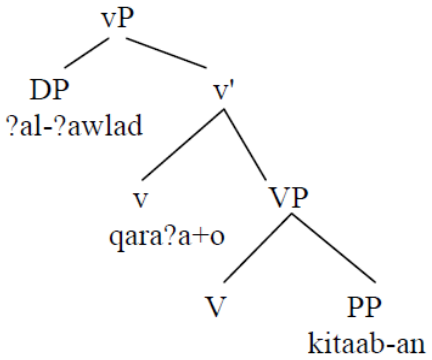

As Chomsky notes, since a transitive vP is a phase, the VP, by being the complement or the domain of the light verb which is the head of the vP will be transferred to the phonological and semantic components and will cease to be accessible to any further syntactic operations. It has also been assumed that the lower copies of moved constituents (in this case the verb (qara?a) receives a null spell out in the PF component. The deleted uninterpretable features (like the case of the DP kitaab-an) are removed from the structure and handed over to the semantic component.

Eventually, the phonological component will not spell out the lower original copy of the verb qara?a, but only the DP kitaab-an.

The syntactic derivation then proceeds by merging the vP with a strong affixal constituent in SA,T, forming the T' as shown below (showing only the items within vP which receive a PF spell-out after the vP was transferred at the end of the vP phase) :

18-

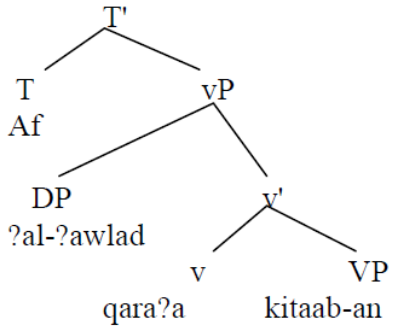

It has been assumed that T is a strong affix in (SA) which means that it triggers the movement of the verb qara?a to adjoin to it (Fassi, 993, 19). As a result we will have the following structure:

19-

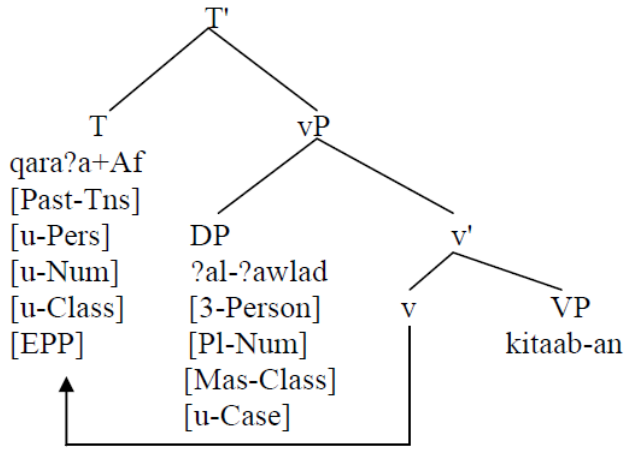

Since T has uninterpreable (unvalued) Phi-features, it is an active probe which searches for a local goal to value and delete its uninterpretable features. The only available goal within the c-commanding domain of the T probe

is the DP ?al-?awlad which is accessible to the T probe and is syntactically active because of its uninterpretable case feature. Thus, ?al-?awlad values the unvalued Phi-features of T and T values the unvalued case feature of ?al-?awlad. It should be noted that ?al-?awlad-u has plural and class number features, so when valuing the unvalued number of T, the verb will agree with the plural and class features of the noun and will be spelled out in the PF component as qara?auu (3-mas-pl). Still, the T has an EPP feature which requires movement of the goal it agrees with to spec-T. The DP ?al-?awladu moves from its original position in spec-v to become the specifier of T as shown below :

20-

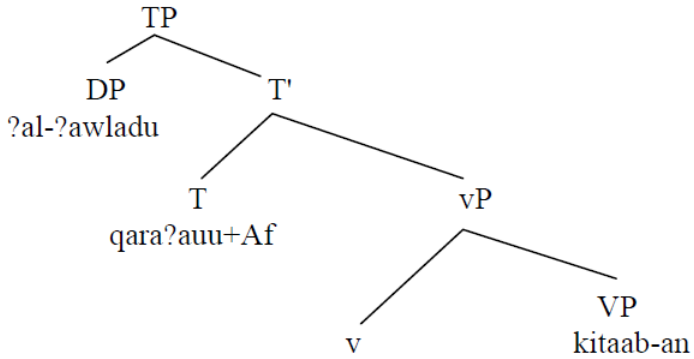

The resulting TP is merged with a null declarative C forming a CP. The null declarative C marks the sentence as declarative. The resulting CP will have the following structure:

21-

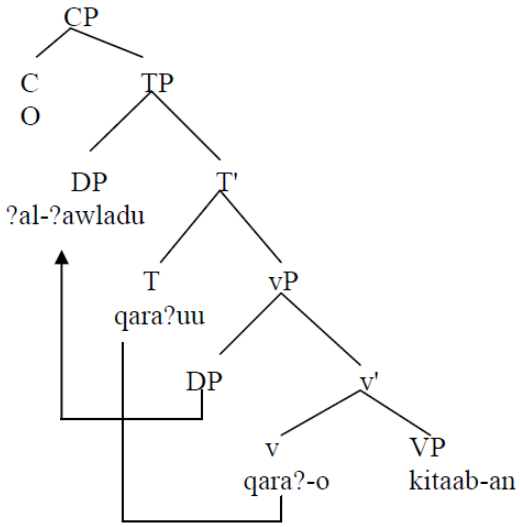

Since CP is a phase and TP is the domain of the head of the phase (null C), TP is transferred to the PF and the semantic components simultaneously. The lower copies of the verb qara?d and the DP ?al-?awlad receive a null spell out in the phonological component. However, we are left with the null C constituent which has not been transferred to the PF and the semantic components for "further processing." It has been assumed in the phase-based model that at the end of the overall derivation the remaining constituents will undergo transfer to the PF and the semantic components to be processed. Thus, at the end of the whole derivation we will get the following sentence in (SA):

22- ?al-?awlad-u	qara?-uu	kitaab-an
The-boys-Nom	wrote 3 pl mas	book-Acc

We can conclude at this point that Chomsky's recent minimalist phase-based framework provides a straight forward account for the SV structure in (SA). This will lend greater empirical support to Chomsky's framework, cross-linguistically.

However, the principles of Minimalism suffers a problem when they are used to derive compound tense constructions. Benmamoun (2000) refers to this problem and shows that the Minimalism principles cannot

justify or give an account for the constructions with compound tense where the Phi-features of agreement are manifest on the auxiliary as well as the main verb in SV structures. This can be shown in the following examples:

23- ?al-?awlaad-u kaan-uu yalʕab-uuna fii ?al-hadiiqat-i

the-boys-NOM were-3plmas play-3plmas in the-garden-DAT

"The boys were playing in the garden."

The example shows that the auxiliary verb "kaan" agrees with its subject in the agreement features of person, number and gender. At the same time, the same agreement features are reflected on the main verb, "Yalʕbuuna". According to the Minimalism principles, the auxiliary verb kaan-uu is in the domain of the subject "?al-?awlaad-u, and is c-commanded by it. Accordingly, the probe-goal relationship exists and agreement features and case assignment are checked in both. Moreover, the main verb, "yalʕabuuna", also acts as a second goal for the probe "?al?awlaad-uu" which c-commands it. Accordingly, we end up with a construction which has a probe with two goals; then, how the Phi-features and case assignment can be checked. Can we say that the Phi-features of both the auxiliary and the main verb are checked by one goal?. If this is true, then, which verb is checked first by the goal? and which verb is considered as the case-assigner for the probe? These questions are not justified within the minimalist approach and no explanation is provided for examples of these kind.

5.2 Verb-Subject Agreement in SA

This section shows how phase-based model of Chomsky can derive VS constructions in SA. In following example:

24- Qara?a ?al-?awlad-u kitaab-an

Wrote 3 sg mas the boys – Nom book–Acc

Adopting the concept of the vP shell analysis, the above example can have the following structure in:

25-

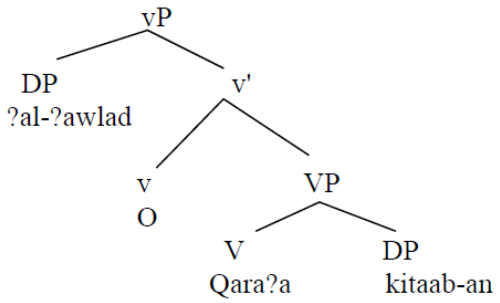

Following Chomsky's approach, we can follow the same steps followed in deriving SV construction, as surveyed in (8-1). First, the light verb v agrees with and assigns accusative case to the DP kitaab-an as it is in its c-commanding domain. As the light v is affixal in nature, it accordingly triggers the movement of the verb Qara?a to adjoin to it. The light verb v ,then, agrees with the DP kitaab-an and the verb Qara?a raises to the light verb v. As vP is considered as a phase in the minimalist approach, its domain the VP will be sent to the PF and the LF. Accordingly, the VP is no longer be accessible to further syntactic operations. Then, the syntactic computation continues to merge the vP in (26) with a tense affix projecting a TP as shown below:

26-

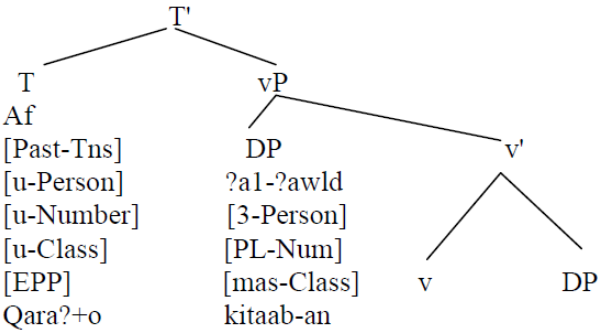

The tense affix has interpretable tense feature and uninterpretable person/number and class features. Having uninterpretable features, the Af is an active probe and searches for a local goal within its c-commanding domain to value these uninterpretable features. The goal which it c-commands is ?al-?awlad. ?al-?awlad values the Phi-features features on the probe Af .The Af, in turn, assigns nominative case to ?al-?awlad-u. Since T has an EPP feature, the T has to project a TP where ?al-?al-wlad-u moves to spec-T as in the following structure:

27-

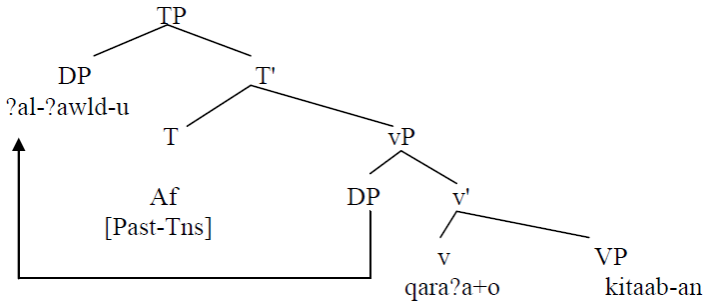

28-

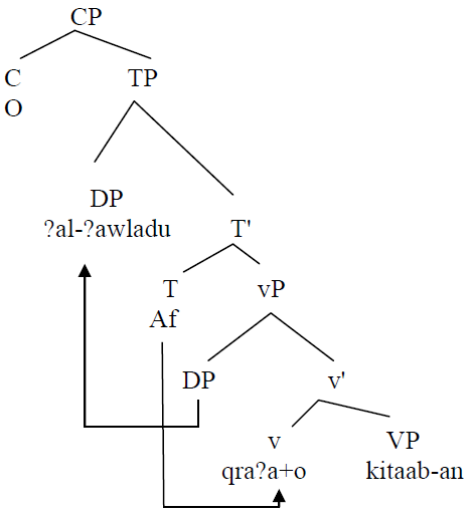

At this stage and since CP is a phase, the TP will be sent to the PF and the semantic components to be processed for suitable interpretations. At the end of the derivation the null C will be transferred to the phonological and semantic components. However, we end up with the SV order.

To suggest an alternative solution, suppose we consider that SA has no split VP projections as shown below:

29-

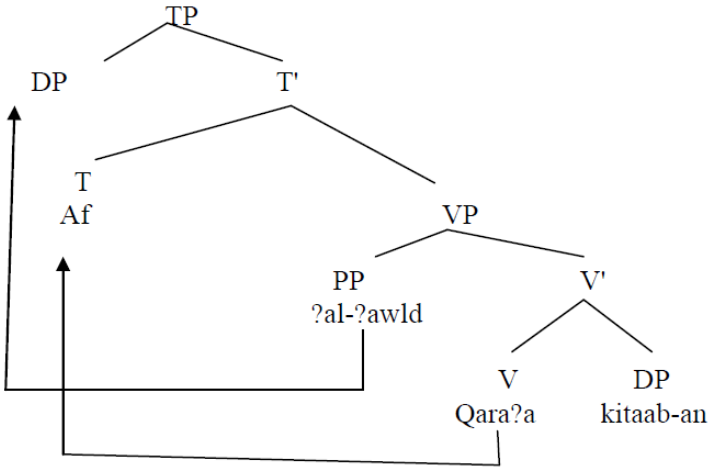

The T affix is an active probe as having unvalued Phi-features and looks for a goal. We have in this construction two nominal goals ?al-?awlad and kitaab-an but as ?al-?awlad is closer to the probe, accordingly, the T assigns nominative case to the goal ?al-awladu. However, we still have problems with the structure resulted in. After movement of the verb to T and as a result of agreement between the verb Qara?a and the plural nominal ?aw-?awladu in the PF, the verb will be spelled out Qara?-uu and not qara?a. There will be no probe to value the Phi-features of the nominal kitaab-an and it will not be assigned an accusative case. Since the tense node has an EPP feature, ?al-?awladu must move to the spec-TP and the TP has to merge with a null declarative C in order to form the CP. However, if we follow Chomsky's model and consider CP as a phase, the complement of this CP is the TP which has to be transferred to the PF and the LP components. However, as the TP contains unvalued Phi-features and an unassigned case (in the case of kitaab) the derivation will crash and will result in an ungrammatical derivation.

These analyses provided above for the derivation of VS constructions within Chomsky's Minimalism principles and phase-based model show that VS word order in SA represents a problem for this framework.

Another problem that faces the minimalist approach is referred to by Soltan (2006). He observes that when the postverbal subject is a pronominal, whether overt or covert, we have full agreement between it and the verb. This can be observed in the following example (Soltan, 2006: 248):

30- a. qara?-uu (hum) d-dars-a. SV+full agreement

read.3mp (they) the-lesson-Acc

Though the verb is followed by the subject it agrees with it in person, number and gender. The minimalism principles, outlined above, do not provide an explanation for this asymmetry of full/partial agreement in SV structures. When the verb is followed by a lexical noun, whether singular or plural, the verb agrees only in gender. But when the verb is followed by a pronominal , all Phi –features are provided and reflected on the verb resulting in full agreement.

6. Conclusion

The study has surveyed the applicability of the principles of Chomsky's Minimalism on the agreement asymmetries that are exposed in two word orders of SA. The study has shown that Minimalism principles can account for the agreement features in SV word order. As shown in (8-1), the phi features of person, number and gender reflected on the verb agree with preverbal subject and can be justified within the framework of Minimalism. However, the same framework of Minimalism fails to account for compound tense constructions in SA. As shown in (23), the principles of Minimalism cannot explain the how the subject is to be assigned the nominative case.

The same problem can be observed with VS constructions. Although the Minimalism framework accounts for the partial agreement of gender between the verb and its postverbal subject, as in (8-2), it fails to provide an explanation for full agreement between the verb and its postverbal subject when it is a pronoun. The study concludes that the principles of Minimalism could not account for the asymmetry in agreement features of the verb in both SV and VS orders in SA

References

Aoun, J, Benmamoun, E., & Sportiche, D. (1994). Agreement and conjunction in some varieties of Arabic. *Linguistic Inquiry, 25*, 195-220.

Benmamoun, E. (2000). *The Feature Structure of Functional Categories: A Comparative Study of Arabic Dialects*. Oxford: Oxford University Press.

Boeckx, C. (2006). *Minimalist Essays*. Amsterdam/Philadelphia, John Benjamins Company.

Chomsky, N. (1981). *Lectures on government and binding*. Dordrecht: Foris.

Chomsky, N. (1995). *The Minimalist Program*. Cambridge, MA: Massachusetts Institute of Technology.

Chomsky, N. (1999). Derivation by phase. *MIT Working Papers in Linguistics*.

Chomsky, N. (2000). Minimalist inquiries: The framework. In R. Martin, D. Michaels, & J. Uriagereka (Eds.), *8 Step by step: Essays on Minimalist syntax in honor of Howard Lasnik* (pp. 9-155). Cambridge, MA: MIT Press.

Chomsky, N. (2004). Beyond explanatory adequacy. In A. Belletti (Ed.), *Structures and beyond The category of syntactic structures* (Vol. 3, pp. 104-131). Oxford: Oxford University Press.

Chomsky, N. (2005). Three factors in language design. *Linguistic Inquiry, 36*, 1-22. http://dx.doi.org/10.1162/0024389052993655

Chomsky, N. (2007). Approaching UG from below. In U. Auerland, & H. M. Gartner (Eds.), *Interfaces + recursion= language? Chomsky s minimalism and the view from syntax-semantics* (pp. 1-29). Berlin: Mouton de Gruyter.

Chomsky, N. (2008). On phases. In C. O. R. Freidin, & M. L. Zubizaretta (Eds.), *Foundational issues in linguistic theory* (pp. 133-166). Cambridge. MA: MIT Press.

Cinque, G. (1977). The Movement Nature of Left Dislocation. *Linguistic Inquiry, 8*, 411-397.

Coopmans, P. (1994). Comments on the paper by Ouhalla. In D. Lightfoot, & N. Hornstein (Eds.), *Verb movement* (pp. 73-85). Cambridge: Cambridge University Press. http://dx.doi.org/10.1017/CBO9780511627705.005

Escobar, L. (1997). Clitic Left Dislocation and Other Relatives. In E. Anagnotopoulou, H. Riemsdijk, & F. Zwarts (Eds.), *Materials on Left Dislocation Linguistik Aktuell*. Amsterdam/Philadelphia: John Benjamins.

Holmberg, A. (2005). Is There a Little Pro? Evidence from Finnish. *Linguistic Inquiry,* 64-533.

Holmberg, A. (2008). Null Subject Parameters. In T. Biberauer, A. Holmberg, I. Roberts, & M. Sheehan (Eds.), *Parametric Variation Null Subjects in Minimalist Theory*. Cambridge: Cambidge University Press.

Horias, N. (2009). A Minimalist Approach to Agreement in Arabic. *Newcastle Working Papers in Linguistics, 15.*

Hornstein, N., Nunes, J., & Grohmann, K. (2005). *Understanding Minimalism.* Cambridge: Cambridge University Press. http://dx.doi.org/10.1017/CBO9780511840678

Lasnik, H. (2003). *Minimalist Investigation*. Routledge , London and New York.

Mohammad, M. A. (1990). The Problem of Subject-Verb Agreement in Arabic: Towards a solution. In M. Eid (Ed.), *Prespectives in Arabic Linguistics I.* Amsterdam: Benjamins.

Mohammad, M. A. (2000). *Word Order, Agreement and Pronominalization in Standard and Palestinian Arabic*. Amesterdam: Benjamins.

Radford, A. (1997a). *Syntactic Theory and the Structure of English*. London Cambridge University Press.

Radford, A. (1997b). *Syntax: A Minimalist Introduction*. London, Cambridge University Press. http://dx.doi.org/10.1017/CBO9781139166898

Radford, A. (2004). *Minimalist Syntax: Exploring the structure of English*. Cambridge, Cambridge University Press. http://dx.doi.org/10.1017/CBO9780511811319

Radford, A. (2009). *Analyzing English Sentences: A Minimalist Approach.* Cambridge, Cambridge University Press. http://dx.doi.org/10.1017/CBO9780511801617

Rizzi, L. (1997). The Fine Structure of Left Periphery. In L. Hoegeman (Ed.), *Elements of Grammar*: *Handbook in Generative Syntax*. Dortrecht: Kluwer. http://dx.doi.org/10.1007/978-94-011-5420-8_7

Safir, K. (1985). *Syntactic Chains*. Cambridge: Cambridge University.

Seuren, P. A. M. (2004). *Chomsky's Minimalism*. Oxford: Oxford University Press.

Soltan, U. (2007). On Formal Feature Licensing in Minimalism: Aspects of Standard Arabic Morphosyntax. Ph.D. dissertation, University of Maryland, College Park Press.

Soltan, U. (2001*). An Argument for Ordered Spec-head Agreement and Selective Targeting Feature Valuation, in a Derivation-by-Phase Framework*. Ms. University of Maryland, College Park.

Soltan, U. (2004). An Argument for Agree and Multiple Spell out. Standard Arabic Asymmetries Revisited. Ms. Workshop on Minimalist Theorizing, Indiana University, Bloomington.

Wickens, G. (1980). *Arabic Grammar Language*. Edinburgh: Edinburgh University Press.